

RECORDING MONITOR M350

TALK BACK/OSCILLATOR SECTION

OSCILLATOR FREQUENCY SELECTOR
100Hz 1kHz 10kHz sinewave

TALKBACK/OSCILLATOR
Sends selected source to PRE-SELECTED outputs

LEVEL CONTROL
For oscillator/talkback level

PRESELECT
Output selector to slate, L-R and studio (OSC does not feed studio) Any or all may be selected

STUDIO MONITOR SECTION

STUDIO SOURCE COMBINER
Source combiner sums together the selected sources. Aux 1 and Aux 2 > Aux 1 > L Aux 2 > R. L-R selects output as stereo. Control room selects the same source as Control Room section below

MUTE
Mutes program to selected output, talkback still active

OUTPUT SELECT
Sends to CUE (normally headphone) or STUDIO (normally loudspeakers) rear panel sockets

LEVEL CONTROL
Cue/studio output level control

CONTROL ROOM MONITOR SECTION

CONTROL ROOM SOURCE SELECTOR
Selects control room monitor source, one of TAPE 1 (2 Track recorder), TAPE 2 (2 track recorder), STUDIO source or L-R output, all stereo. Also selects the source for L-R monitor meters

MONO Monos monitor signal

DIM
Dims Monitor output level (also activated by talk switch)

AUTOMUTE
Fader open: mute of monitor output. Requires optional M310X input modules

MUTE Mutes monitor outputs

LS OUTPUT Main/alternate output selector

LEVEL CONTROL Monitor output level adjust

HP LEVEL CONTROL
Headphone level control not muted follows CR source

'PFL IN USE' INDICATOR LED

CHECK MODE
Selector switch between PFL or SOLO IN PLACE for CHECK switches. PFL interrupts monitor LS and meters Solo In Place mutes inputs which are not soloed.

SOLO ENABLE CONTROLS
Master enable switches for channel and monitor SOLO IN PLACE. LINK combines channel and monitor SOLO IN PLACE operations. The separation of the solo systems allows SOLO IN PLACE to be accompanied by echo returns via monitors

TALKBACK MIC Internal mic capsule for talkback

HEADPHONE SOCKET

TALK SWITCH Press to activate talkback

MUTE AUTOMATION KEYBOARD AND DISPLAY V4. FOR CONTROL OF THE PROGRAMMABLE AUDIO MUTE MEMORY SYSTEM.

MULTIFUNCTION Display, showing memory numbers, system modes and MIDI channel

EIGHT Control keys and associated indicators give control over the system modes, MIDI communications and memory data. **SHIFT** Function key which gives access to pre-set control modes and the LOCAL, AUTO and DUMP keys.

TOGGLE Switches the display to read last memory used. **LOCAL** Is used to turn off the internal MIDI link so that only commands arriving via MIDI IN are recognised. **CLEAR** Erases the working memory, resets all audio mutes to audio ON and also has exiting functions. **RECORD** Arms the internal sequencer memory to store mute events

UPDATE Enters the current mute scene or song into memory. **RECALL** Transfers mute patch or song memory to the working memory, also automated via MIDI. **UP,DOWN** Memory pre-selector keys. **AUTO** Arms the internal sequencer to respond to external clock with record drop-in

DUMP Initiates transfer of memory contents for archiving via MIDI.



DUAL GROUP M330

ODD MONITORS SECTION
One on each of 8 group modules

TAPE/LINE SELECTORS
Both up: Odd Group Output to L-R mix and meter.
TAPE pressed; Multitrack Tape Return to L-R mix and meter.
LINE pressed: Monitor Line Input to L-R mix.
Source selected by TAPE switch is displayed on the meter
Used to bring an extra line level source into the L-R mix during re-mix.

HF CONTROL
Shelving characteristic with ±12dB cut/boost at 10kHz corner frequency

LF CONTROL
Shelving characteristic with ±12dB cut/boost at 100Hz corner frequency

AUX SENDS:
Sends selected monitor source to Aux outputs.
Pre/post selector for Aux sends 1&2
Aux send level controls 1&2 for cue mix
Aux 3/4 selector switch for Aux send level control for echo/effect
Internal links are provided for pre and post fade send

LEVEL CONTROL
Monitor signal level control to the L-R mix

PAN CONTROL
To position signal in L-R mix

CHECK
PFL or SOLO IN PLACE set by master control (with indicator LED)

MUTE
Audio mute with indicator, cuts all post fader outputs. High quality "soft cut" switch with mute automation.

EVEN MONITORS SECTION
One on each of 8 group modules. All functions as described above. Even Group Output, Tape or Line input is monitored

GROUP INSERTION POINT
Rear panel ¼" unbalanced pre-fader break-jacks.

FADER REV
Reverses even group fader and even monitor level control

FADER REV
Reverses odd group fader and odd monitor level control

8 TRACK SYSTEMS
Four M330 modules are supplied, giving eight outputs and eight monitors for eight track operation. Consoles are prewired to accept a further four M330 modules at a later date to give sixteen outputs and sixteen returns, one four way module blank covers the space required at the right of the console. The choice of 16 track VU or Bargraph meterbridge is the same as for standard sixteen track systems.

16 TRACK SYSTEMS
Eight M330 modules are fitted giving 16 outputs and monitors with 16 VU or LED meters.

24 TRACK SYSTEMS
Eight M330 and four M335 modules are fitted giving 16 outputs and 24 monitors with 24 track meters. Connections are included for all 24 tracks in and out. XLR for non patchbay, multipin for patchbay version.

RECORDING MODULE SET (Patch Bay overleaf)

ODD & EVEN GROUP FADERS
100mm Alps fader with 10dB boost available. P & G 3000 option available.



DUAL MONITOR M335

Four modules are supplied in an 'L' section to eight M330 modules and provide mono 'prong' for tracks 17 to 24. Channel Tape Inputs 17 to 24 are internally parallel connected to tin-se modules. Chose whether you mix tracks via channels or monitors by push/button selection Eight rear jack sockets provide alternative Line inputs to the mix. When not used for track mixing these monitor sections provide inputs for synthr. :trum machines or echo return. Eight rear XLR sockets are provided (pallel M330B) for connection to recorder inputs 17 to 24. These outputs are duplicates of group outputs 1 to 8 Assignment to tracks 17 to 24 is achieved simultaneous y with track 1 using channel routing switch 1-2. The recorder tracks 1 or 17 are switched between record and safe as required. The level to track 1 7 to 24 is controlled during recording with (roup faders 1 to 8.
An insertion point is provided pre fader for each monitor section.
The controls for odd number (17- 3) and even number (18-24) monitors are identical.

LINE
Up selects Tape input to the monitor section and meter.
Down selects Line Input to the mix. The meter continues to show Tape In.

HF CONTROL
Shelving characteristic EQ with ±12dB cut/boost at 10kHz corner frequency.

LF CONTROL
Shelving characteristic EQ with ±12dB cut/boost at 100Hz corner frequency.

AUX SENDS
Sends the selected monitor source to the Aux outputs
Pre/post selector for Aux sends 1 nd 2
Aux send level controls 1 and 2
Aux 3/4 selector switch for the se3 control below
Aux 3/4 send level control. Factor set post fader
Internal links allow alternative selection of pre or post fader send for the 3/4 level control

LEVEL CONTROL
Monitor signal level control to th...R mix

PAN CONTROL
To position the signal in the L-R rix

CHECK
PFL or SOLO IN PLACE set by mnter control (with indicator LED)

MUTE
Audio mute with indicator, cuts ajuost fader outputs. High quality "soft cut" swch with mute automation.



ODD & EVEN INPUT FADERS
100mm Alps fader with 10dB bo...available. There are no fader reverse switche The faders are always input faders to the mix



SABER PLUS PA Version including optional stand, lamp and microphone. 24:8:8 SPX & stand S.

SABER PLUS Recording Version including VU meters. 32.16.16 MVU.

SABER PLUS Recording Version with 24 track monitoring and metering. 36:16:24 LBG. The model shown includes optional stereo channels.

SPECIFICATION & AUDIO PERFORMANCE

ELECTRONIC PERFORMANCE
0dBu = 0.775 Vrms
0VU = +4dBu (1.23V) or -8dBu (300mV)
Reference Frequency = 1kHz

GAIN
Input to Group L-R or Mono Outputs
Channel Mic In: 10dB (PAD IN) to +70dB
Line In: -4dB to +36dB
Tape In: +12dB to +26dB
Monitor Tape In: +20dB or 12dB (I>>cable)
See connector illustrations for further data

FREQUENCY RESPONSE
Referred to 1kHz @ -4dBu EQ Out
Mic In to Group Out, 40dB gain, -0,+1dB 20Hz-20kHz
Line/Tape In to L-R Out, 0dB gain, -0.5dB 20Hz-20kHz

OUTPUTS
Balanced L, R, Mono, Group 1-16
Outputs: max level +22dBu with balanced termination of 600 ohms or more.
+21dBu unbalanced.
Unbalanced Direct, Aux and monitor outputs: max level +21dBu with load of 2k ohms or more. +18dBu with 600 ohm load. Operating Level: 4dBu or -8dBu (link-able)

DISTORTION
THD+ Noise @ +20dBu output level, typical

	Gain	1kHz	10kHz
Mic In to Group Out	70dB	<0.01%	<0.01%
Line/Tape to L-R Out	0dB	<0.007%	<0.007%

EQUALISER
See module descriptions

CONNECTIONS
See panel drawings inside

POWER SUPPLY
Type RPS4, rack mounted unit including +8Vdc for phantom powered microphones.
AC Input: 110V, 120V, 220V, 240V, 50-60Hz

NOISE PERFORMANCE
RMS Noise, 20kHz bandwidth, ref 0VU
Mic in, equivalent input noise: -127dBm (200 ohm source)
Group Out, 1 input open, unity gain, EQ flat: -86dB
Group Out, 24 inputs routed, faders closed: -80dB
L-R Out, 1 input open, unity gain, EQ flat: -85dB
L-R Out, 24 inputs & 16 monitors routed, faders closed: -82dB

CROSSTALK
Referred to driven output. 1kHz 10kHz
Muted, Input to L-R Out: -95dB -70dB
On, Input to un-routed Group
L-R Separation -95dB -80dB
-66dB -63dB

METERING
Standard meterbridge for all recording models includes 16 track meters plus L&R meters, optionally:
VU type: 18 or 26 illuminated analogue VU meters
BG type: 18 or 26 20-segment LED PP-8 bargraphs. -24 to +12dB
PA Versions have metering incorporate in modules
M326 Group 20-segment LED Peak bargraph. -36 to +15dB
M355 Monitor: illuminated analogue VU meters

CONSTRUCTION
All steel frame with grey eggshell stove enamel finish.
Recording versions supplied with rugged cantilever stand.
PA versions for table-top use, stand optional.
Padded arm rest and solid wood trims.
Modules individually modular, constructed of stove enamelled aluminium with stoved epoxy screen printed graphics.
Complete fiver serviceable from top and rear.

DIMENSIONS mm (INS)

Model	WIDTH	FRONT-BACK	HEIGHT
S Frame 24 input capacity	1243 (48.9)	800 (31.5)	1060 (41.75)
M Frame 32 input capacity	1503 (59.2)	800 (31.5)	1060 (41.75)
L Frame 40 input capacity	1763 (69.4)	800 (31.5)	1060 (41.75)
XL Frame 48 input capacity	2023 (79.6)	800 (31.5)	1060 (41.75)
PA Versions	S, M, L, XL	800 (31.5)	230 (9)
Power Supply RPS4	19 inch rack	170 (7)	3U

STANDARD MODELS
Recording versions: including meterbridge, stand and RPS4

Small Frame	Medium Frame	Large Frame	Extra Large Frame
24:8:8 SVU	32:8:8 MVU	40:8:8 LVU	48:8:8 XLVU
24:8:8 SBG	32:8:8 MBG	40:8:8 LBG	48:8:8 XLBG
24:16:16 SVU	32:16:16 MVU	40:16:16 LVU	48:16:16 XLVU
24:16:16 SBG	32:16:16 MBG	40:16:16 LBG	48:16:16 XLBG
-	28:16:24 MVU	36:16:24 LVU	44:16:24 XLVU
-	28:16:24 MBG	36:16:24 LBG	44:16:24 XLBG
Recording Patchbay Versions			
-	-	32:16:16 LVUPB	40:16:16 XLVUPB
-	-	32:16:16 LBGPB	40:16:16 XLBGPB
-	-	28:16:24 LVUPB	36:16:24 XLVUPB
-	-	28:16:24 LVUPB	36:16:24 XLVUPB
-	-	28:16:24 LBGPB	36:16:24 XLBGPB

PA Versions: including RPS4 and meters on output modules. Excluding stand.

24:8:8 SPX	32:8:8 MPX	40:8:8 LPX	48:8:8 XLPX

Note 1: 8 track version having 2 4 x M330 pre-wired for 8 x M330

The Saber Plus Model shown on the front cover is a 36:16:24 XLBG with Patchbay option and is shown with accessories which are not included.

SABER PLUS BLOCK SCHEMATICS

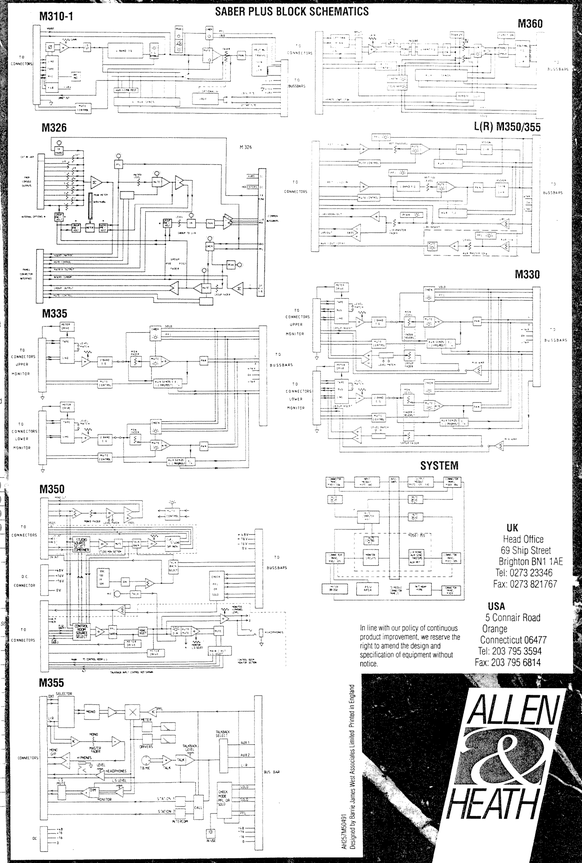

In line with our policy of continuous product improvement, we reserve the right to amend the design and specification of equipment without notice.

UK
Head Office
69 Ship Street
Brighton BN1 1AE
Tel: 0273 23346
Fax: 0273 821767

USA
5 Connair Road
Orange
Connecticut 06477
Tel: 203 795 3594
Fax: 203 795 6814

ALLEN & HEATH
Allen & Heath Brenell Ltd
Kernick Industrial Estate, Penryn
Cornwall, England TR10 9LU
Tel: 0326 372070
Fax: 0326 377040
Telex: 45296

ABCD/M0A291
Printed in England, James Weir Associates Limited, Portrait

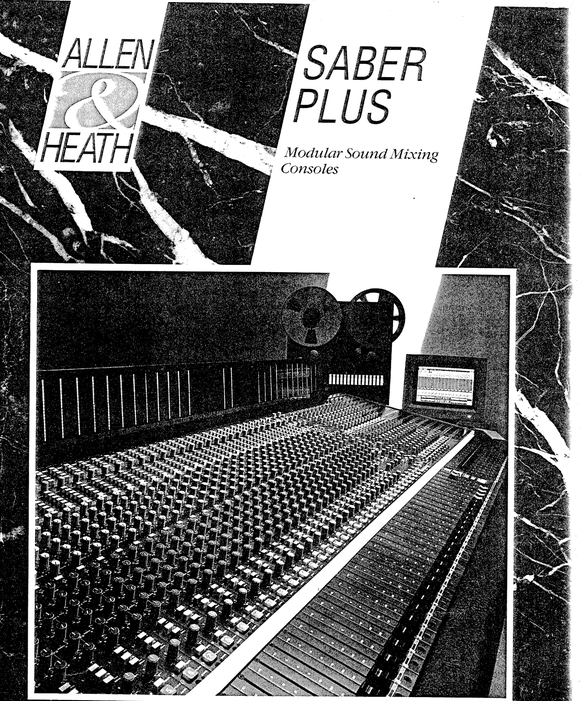

ALLEN & HEATH

SABER PLUS

Modular Sound Mixing Consoles

building on success

Saber Plus is yet a further advance on the best selling series of consoles launched in 1988 and now the world's most popular 16/24 track music production consoles.

The visual design has been retained but still further technical advances in the Mute Automation, equalisation and operator information areas have been achieved.

Now the leadership of Saber in its new 'Plus' format is re-confirmed.

Saber Plus is for 16 and 24 track recording studios and for live sound, both installed and touring. Significant improvements in sound transparency further enhance its role in the digital multitrack studio.

The matrix module further enhances Saber Plus' claim as a leading PA console, Saber Plus PA offers up to 48 inputs, 8 subgroups, 10 x 8 matrix and 6 auxiliaries plus enhanced Mute Automation, equalisation and operator information.

The fully modular range is designed to allow maximum flexibility now and in the future, while all models accept optional facilities.

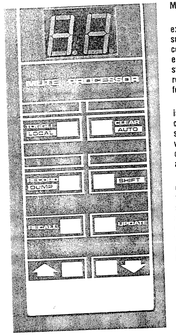

SABER PLUS STUDIO CONSOLES

■ Mute Automation for all Saber Plus consoles allows memory control of audio mutes individually, in 'snap-shot' combination, in synchronisation with the performance, and with full MIDI compatibility. Channel, echo return and multitrack monitor mutes are automated.

■ 16 track recording versions with 24, 32, 40 and 48 input channels plus 16 track monitoring and metering. Up to 64 inputs with EQ and fader for mixdown plus four returns.

■ 24 track recording versions with 28, 36 and 44 input channels with 24 track monitoring and metering. Up to 68 inputs with EQ and fader for mixdown, plus four returns.

■ Four Band Equalisation with two sweep overlapping mid-frequency controls, with 20:1 frequency range. The upper-mid range is from 12kHz to 600Hz centre frequency, and the lower mid-range 1.5kHz to 70Hz centre frequency. The high and low frequency shelving sections operate with corner frequencies; 8kHz and 16kHz switched HF, and 40Hz and 80Hz switched LF.

■ Two Band Equalisation for all multitrack monitor returns.

■ Three input connections per channel: mic, track and line inputs.

■ Three input connections per monitor section: group, track and line inputs.

■ EQ and fader reverse on all multitrack monitors for use as remix return inputs.

■ Ergonomically efficient control layout with EQ close to hand.

■ Unique checking system providing PFL and Solo in Place as set by master status switch.

■ Mic, line and tape inputs, and mono, stereo and group outputs electronically balanced.

■ Solo-in-place system includes echo returns which do not mute i.e. are "solo safe".

■ Impeccable audio specification and transparent sonic quality which will be appreciated in the digital studio.

■ Additional Channel status indicator has been introduced for the EQ ON switch.

■ The new Channel Signal Present indicator has a dynamic response showing the varying pre-fader audio level by varying duration and intensity of the green LED illumination.

■ Ultra smooth 100mm faders throughout.

■ Floor stand is included.

STUDIO CONSOLE OPTIONS

Standard models are listed under the console specification. Saber Plus is also available in versions which are part loaded for future expansion, and which include the following options.

■ Frame sizes for : 24, 28, 32, 36, 40, 44, 48 channel capacity.

■ 16 or 24 track monitoring and metering.

■ Choice of VU or Bargraph meterbridge.

■ Integral patchbay, with multipin studio interface.

■ Stereo input channels with "solo safe" facility and RIAA option.

■ Penny & Giles and Automated fader options.

■ Soft cover.

MUTE AUTOMATION "V4"

Mute Automation is the latest expression of Allen & Heath's success with integrating the console into the operating environment. Mute events are stored in the console's memory for replay later on with "hands free" for other tasks.

The process of Mute Automation is invisible to the operator who continues to use familiar mute switches in the traditional manner with the benefit of instantaneous control and with manual override available at all times.

Memory is included within the console to store mute data in two forms during rehearsal for subsequent playback. One memory area is for "snap-shots" of the console status at any instant in time. Data is entered and recalled manually. The second memory area is for sequences of mutes and "snap-shot" recall events in synchronisation with MIDI clock from an external source.

Unique to Allen & Heath's "V4" Mute Automation system is its independence from any external memory for these operations. Mute Automation becomes possible in environments without MIDI memory, and when such memory is available conflicts of data interpretation are avoided.

The system has full MIDI compatibility which allows off-line editing and archiving on MIDI sequencers.

SPECIFICATION

■ 32 internal patch memories for mute "snap-shots".

■ 32 internal mute song sequence memories for synchronisation use.

■ On-board editing for individual events, erase all, erase forward and erase last.

■ On-board editing for patch recall events.

■ Channel-by-channel automation isolation.

■ Ultrafast automatic cueing after FF and REW operations.

■ Battery-back-up of memory contents and system default settings.

■ MIDI IN, OUT, and THRU connections.

BASIC MIDI IMPLEMENTATION

■ MIDI Channel: user selectable 1-16.

■ Program Change: patch memory recall.

■ Control Change: mute ON/OFF (user option).

■ Note ON/OFF: mute ON/OFF (user option).

■ Advanced NOTE ON/OFF protocol avoids external sequencer 'throw-out' problems.

■ System Exclusive: Allen & Heath User I.D.

■ System Common/Real-Time received: Song Select. Song Position Pointer, Start, Stop, Continue, Clock.

SABER PLUS PA CONSOLES

■ Based on the architecture of Studio Saber Plus, special refinements are added to provide a PA console to incorporate the latest technology.

■ Saber Plus PA consoles for live sound applications features the output matrix system which puts control plus creativity in the hands of the operator.

■ Output system with 8 subgroups, 10 x 8 output matrix, and main stereo mix.

■ Versions with 24, 32, 40 and 48 input channels.

■ Six auxiliary mixes from channels including pre EQ, pre-fader and post fader sources.

■ Pre-fader auxiliary source includes "with mute" option, necessary for radio mic foldback control.

■ Mute Automation for channel, echo return, group and matrix audio mutes.

■ Ultra smooth 100mm faders throughout.

■ Standard theatre intercom interface.

■ Operator "gooseneck" lamp sockets included.

PA CONSOLE OPTIONS

Standard models are listed under the console specification. Saber Plus is also available in versions which are part loaded for future expansion, and which include the following options.

■ Four frame sizes: 24, 32, 40, 48 channel capacity.

■ Stereo input channels with RIAA option.

■ Floor stand, to suit each size.

■ Penny & Giles and Automated fader options.

■ Soft cover.

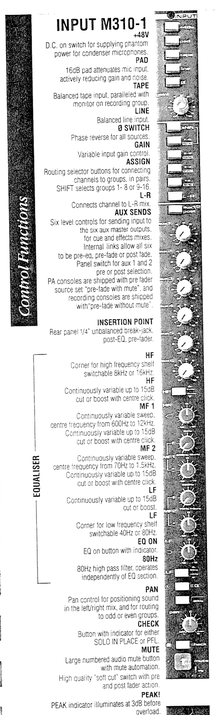

INPUT M310-1

+48V
D.C. on switch for supplying phantom power for condenser microphones.

PAD
16dB pad attenuates mic input, actively reducing gain and noise.

TAPE
Balanced tape input, paralleled with monitor on recording group.

LINE
Balanced line input.

Ø SWITCH
Phase reverse for all sources.

GAIN
Variable input gain control.

ASSIGN
Routing selector buttons for connecting channels to groups, in pairs. SHIFT selects groups 1- 8 or 9-16.

L-R
Connects channel to L-R mix.

AUX SENDS
Six level controls for sending input to the six aux master outputs, for cue and effects sends. Internal links allow all six to be pre-eq, pre-fade or post fade. Panel switch for aux 1 and 2 pre or post selection.
PA consoles are shipped with pre fader source set "pre-fade with mute", and recording consoles are shipped with"pre-fade without mute".

INSERTION POINT
Rear panel 1/4" unbalanced break-jack, post-EQ, pre-fader.

HF
Corner for high frequency shelf, switchable 8kHz or 16kHz.

HF
Continuously variable up to 15dB cut or boost with centre click.

MF 1
Continuously variable sweep centre frequency from 600Hz to 12kHz. Continuously variable up to 15dB cut or boost with centre click.

MF 2
Continuously variable sweep centre frequency from 70Hz to 1.5kHz. Continuously variable up to 15dB cut or boost with centre click.

LF
Continuously variable up to 15dB cut or boost.

LF
Corner for low frequency shelf switchable 40Hz or 80Hz.

EQ ON
EQ on button with indicator.

80Hz
80Hz high pass filter, operates independently of EQ section.

PAN
Pan control for positioning sound in the left/right mix, and for routing to odd or even groups.

CHECK
Button with indicator for either SOLO IN PLACE or PFL.

MUTE
Large numbered audio mute button with integral mute automation.

PEAK
PEAK indicator illuminates at 3dB before overload.

SIG
SIGNAL PRESENCE indicator. The duration and brightness of illumination correspond to the strength of the input signal. Its use in conjunction with the PEAK indicator gives input metering.

FADER
100mm smooth acting Alps fader with 100B of boost available. Can be replaced with Penny and Giles 3000 series fader and can also be fitted with one of a number of fader automation packages. Please ask for a quotation.

M310-1 X

The "X" option at small extra cost offers automuting of control room speakers with the fader. Also external devices or lamps can be triggered by the fader.

STEREO INPUT M360

INPUT SELECTOR
Selects stereo input 1 or 2. Input 1 may be ordered with RIAA equalisation - M360X

Ø SWITCH
Allows phase on left signal path to be reversed

STEREO SIGNAL SELECTOR
Operates after the input selector.
Release both switches for normal operation.
L selects L input to both channels. R selects R input to both channels. L+R gives mono mix on both channels

GAIN
For input level adjustment

ASSIGN:
Multitrack routing selector bank and L+R routing switch
L = odd numbers. R = even numbers

AUX SENDS:
Pre/post selector for Aux sends 1&2

INSERTION POINT
Rear panel 1/4" unbalanced break-jack.

EQ
Level and balance control for mix Aux 1 & 2 for cue. L+1, R+2

Level and balance control for Aux 3 & 4. L+3, R+4

Send level controls for Aux 5 & 6. L+5, L+6 + R

Internal links are provided to cue PFL post fade sends.

HF EQ
Corner frequency switch 6kHz/12kHz

Cut/ boost control ±12dB with shelving characteristic

MF1
Cut/boost control ±12dB peaking characteristic at a centre frequency of 2.5kHz

MF2
Cut/boost control ±12dB peaking characteristic at a centre frequency of 250Hz

LF EQ
Cut boost control ±12dB with shelving characteristic

Corner frequency switch 70Hz/ 80Hz

EQ ON
EQ on switch to allow instant comparison

BALANCE CONTROL
Adjusts the relative levels of L and R channel signals from the fader to the assign section

SOLO SAFE
Disconnects channel from solo bus, allowing use as an echo return input.

CHECK
PFL or SOLO IN PLACE set by master control (with indicator LED)

CHANNEL ON
Combined Audio on-switch and channel cue function. The audio mute is programmable. When ON, fader open=start, fader closed=stop. When OFF and fader open, then ON=start. OFF=stop. Used for remote control of programme sources.

PEAK
LED illuminates 3dB before overload. Detects post EQ, pre-fader signal level.

CHANNEL FADER
100mm Alps centre fader – can be replaced with Penny and Giles 3000 series fader – with 10dB boost available.

PA MODULE SET

RECORDING MODULE SET

MONITOR MODULE

Master output/monitor system, four module widths. Left hand half is identical for Recording and PA versions.

AUX MASTER SECTION
Contains master controls for each of Aux 1-6 outputs. All auxes identical

LEVEL
Level control for Aux Output

PFL
Prefade listen switch with LED

MUTE
Output mute with LED indicator
Not programmable

RETURNS 1-4
Are mono line level inputs for external effects or to bring other consoles into the mix. They are not muted by SOLO IN PLACE.

RETURN INPUT 1(2)

ASSIGN:
Multitrack routing selector bank and L/R routing switch

HF CONTROL
Shelving characteristic with ±12dB cut/boost at 10kHz

LF CONTROL
Shelving characteristic with ±12dB cut/boost at 100Hz

AUX SENDS:
Aux send level controls 1 & 2 for cue mix

LEVEL CONTROL
Return signal level to assigned outputs

PAN CONTROL
Used with routing selector to assign inputs and position in L-R mix

PFL
Prefade listen switch with LED

MUTE
Audio mute with indicator, cuts all post fader outputs. High quality "soft cut" switch with mute automation. Not muted by SOLO IN PLACE

RETURN INPUT 3(4)

AUX SENDS:
Aux send level controls 1 & 2 for cue mix

LEVEL CONTROL
Return signal level to L-R

ASSIGN:
L-R routing switch

PAN CONTROL
To position signal in L-R mix

PFL
Prefade listen switch with LED

MUTE
Audio mute with indicator, cuts all post fader outputs. High quality "soft cut" switch with mute automation. Not muted by SOLO IN PLACE

L(R) PEAK LED
LED illuminates 3dB before overload Detects prefader signal level

WRITE-ON STRIP
Write-on-strip for identification
Removable for cleaning

STEREO & MONO OUTPUT FADERS
These control the level of the L-R and Mono output. Mono is the sum of the L and R post fader signals.
100mm Alps fader with a 10dB boost available.

INSERTION POINT
Rear panel 1/4" unbalanced pre-fader break-jacks.

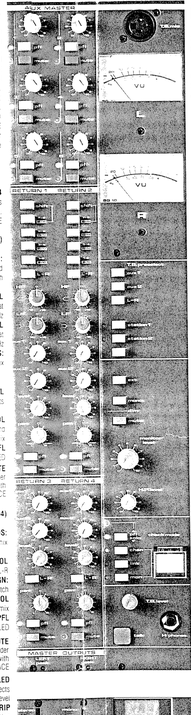

PA MONITOR M355

TALKBACK MIC
XLR mic input (balanced with internal phantom power option)

L-R METERS
Illuminated VU meters for the L-R Master outputs. PFL level and Exit monitor input level

TALKBACK PRESELECT
Sends talkback signal to any or all of Aux 1, Aux 2 and L-R mix

TWO STATION INTERCOM SYSTEM
Compatible with Cleancom and Tecpro systems. Can speak to two systems selected by Station selectors. Listen to selected system(s) on control room monitor. Call lights indicate call function from external stations. Call button mutes incoming intercom and sends talkback mic to selected system(s)

EXT MONITOR
Source select switch for monitor output
Normally the L-R output, alternatively an external stereo source, eg dummyhead

MONO
Mono monitor signal

DIM
LED indicates monitors dimmed by active talkback

MUTE
Mutes monitor output

MONITOR LEVEL
Monitor output level control

HP LEVEL
Headphone level control HP programme is the same as monitor

'PFL IN USE' INDICATOR LED CHECK MODE
Selector switch between PFL or SOLO IN PLACE for check switches. PFL interrupts monitor L-S and meters. Solo In Place mutes inputs which are not soloed

SOLO ON
Illuminated master solo enable with protective cover, prevents accidental operation during the performance

SOLO ENABLE CONTROLS
Master enable switches for channel and monitor SOLO IN PLACE. LINK combines channel and monitor SOLO IN PLACE

MUTE ENABLE
Master enable switches for channel and monitor SOLO IN PLACE

TB LEVEL
Talkback microphone level control

HEADPHONE SOCKET

TALK SWITCH Press to activate talkback

MUTE AUTOMATION KEYBOARD AND DISPLAY V4. FOR CONTROL OF THE PROGRAMMABLE AUDIO MUTE MEMORY SYSTEM.

MULTIFUNCTION Display, showing memory numbers, system modes and MIDI channel.

EIGHT Control keys and associated indicators give control over the system modes, MIDI communications and memory data. **SHIFT** Function key which gives access to extra control modes and the LOCAL, AUTO and DUMP keys

TOGGLE Switches the display to the last memory used. Used to turn off the internal MIDI link so that only commands arriving via MIDI IN are recognised. **CLEAR** Erase the working memory, resets all audio mutes to audio ON, and also has editing functions. **RECORD** Arms the internal sequencer memory to store mute events. **UPDATE** Enters the current mute scene or song into memory. **RECALL** Transfers mute graph or song memory to the working memory, also automated via MIDI. **UP/DOWN** Data entry/cursor keys. **AUTO** Arms the internal sequencer to respond to external clock with record drop-in. **DUMP** Initiates transfer of memory contents for archiving via MIDI

Memory is organised into two areas; 32 patch memories for snap-shots of mute settings. 32 song memories for mute sequences. In addition memory 0 is available for special purposes. Patch and Song also have working memory areas which contain the current mute status and the current song status respectively.

PA MATRIX OUTPUT M326

SYSTEM OVERVIEW
Matrix output systems are a powerful tool for successful operation of the distributed loudspeaker clusters often employed for theatre, tour and conference work. Creativity and control are the twin benefits of output matrixing; creative freedom for the sound designer to provide tailored sound coverage to distributed loudspeakers, and control where it is needed in the hands of the operator. SABER'S matrix outputs each derive programme from the eight group outputs, the main L-R output and an external I/P input. Standard systems have eight M325 matrix output modules.

OUTPUT METER
Switched between Group or Matrix output. Twenty segment LED bargraph having peak (fast rise, fast decay) characteristics and 45dB indicating range. 0dB reference level is +4dBu output level. Post fader group or matrix signal is displayed, refer also to Options.

GROUP TO L-R
LEVEL AND PAN controls for mixing the group output into the main L-R output. The on-off switch has centre "off" indication. Group post-fader source is factory standard, refer also to Options.

MATRIX CONTROLS
Ten source level controls adjust the balance of the matrix output. Overall control of the output is made with the LEVEL control. EXT IN adjusts the contribution from the rear panel input jack (one per module). L-R adjusts the contribution from the main L-R mix (in mono). Controls 1-8 adjust the contributions of each group output to the matrix output. Group post-fader source is the factory standard, refer also to Options. External processors such as equalisers can be patched into the matrix via the group insertion point. Each matrix output receives operator talk back from the console M355 master module for cueing purposes. Each matrix has an individual TB ENABLE pushbutton for this function. PFL gives headphone and master meter indication of each matrix mix sourced before the Level control. MUTE switches the matrix output on or off and is programmable using the on-board Mute Processor memory system. Creative advances such as snap-shot scene change mutes and MIDI synchronisation to show tapes are easily achieved. The mute is achieved with high reliability solid state switching and is silent in operation.

GROUP CONTROLS
Inputs are routed to groups 1 to 8, are summed, pass via the rear panel insertion point connector to the GROUP FADER and then to the balanced XLR output panel connector. Above the write on strip is Group control CHECK (with LED indicator) which is dual function PFL or Solo-in-Place. PEAK indicates group prefader level. Operation of MUTE cuts the XLR output and the post fader sends to the mix, to the meter and matrix controls. Group Mute is programmable, like Matrix mute. The standard fader is 100mm Alps type calibrated with 10dB boost available.

USER CONFIGURABLE OPTIONS
Internal solderless jumper links allow reconfiguration of the system to individual requirements.

SYSTEM	STANDARD	OPTION
Group meter	post fader	pre fader
Group to L-R	post fader	pre fader
Group to Matrix	post fader	pre fader
Matrix meter	post fader	pre fader

In all cases post fader is also post-mute and pre fader is pre-mute.

CONNECTOR PANELS

The panels illustrated below are fitted at the rear of the console behind the appropriate modules

M301
Connector panel for eight M310 (M310X) input modules

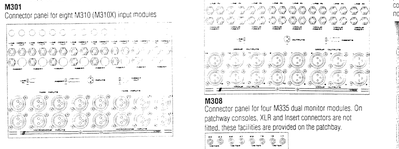

M300
Connector panel for eight M326 PA Matrix Output modules

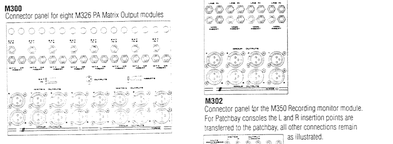

M305
Connector panel for four M360 stereo input modules

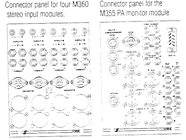

M305
Connector panel for the M355 PA monitor module

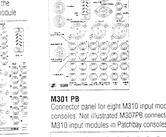

Not illustrated:
M307 For four M310 (M310X) modules.
M306PB for four M360 modules when patchbay supplied.
M307PB for four M310 modules when patchbay supplied.
Module blank four module width.
Single module blank.
Connector blank eight module width.

Part filled frames are available by subtraction of input modules in multiples of four. The module blank is fitted and a fully wired M301 connector panel is fitted to permit subsequent module addition. Unless specified, blanks are positioned in place of the highest numbered inputs. If eight module positions are required, blank then a connector blank (no wiring) can be supplied

Patchbay consoles are supplied pre-wired for fully loaded formats to permit addition of modules at a later time.

CONNECTIONS SUMMARY

MIC IN XLR female, balanced, pin 2 hot.
TAPE IN XLR female, balanced, pin 2 hot paralled with group monitor tape input.
LINE IN 1/4" jack, balanced, tip hot.
GROUP OUT L,R, MONO OUT, XLR male, balanced, pin 2 hot.
INSERT 1/4" jack, tip-send, ring-return.
DIRECT OUT, AUX OUT, MONITOR LS OUT.
RETURN IN, STEREO TAPE IN all 1/4" jack, unbalanced.
PA VERSIONS ONLY: COMMS IN/OUT. XLR pin 1 ground, pin 2 loop DC, pin 3 audio.
LAMP DC connection to console BNC sockets.
RECORDING VERSIONS ONLY: MUTE CONTROL, locking 5 pin DIN connector output from module option M310K.
M306 ONLY: Input 1, RCA phono L & R inputs, unbalanced, either 300mV (std.) or RIAA equalised (module M360X option)
REMOTE, locking 5 pin DIN connector. start/stop interface
Input 2, 1/4" jack, balanced L & R inputs

M303

Connector panel for eight M330 group modules.

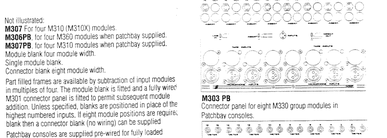

M308
Connector panel for four M335 dual monitor modules. On patchway consoles. XLR and Insert connectors are not fitted, these facilities are provided on the patchbay.

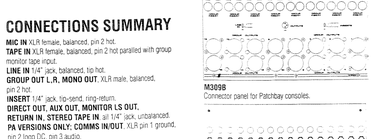

M302
Connector panel for the M350 Recording monitor module. For Patchpay consoles the L and R insertion points are transferred to the patchbay, all other connections remain as illustrated.

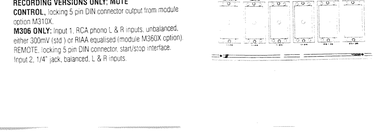

M301 PB
Connector panel for eight M310 input modules in Patchpay consoles. Not illustrated M307PB connector panel for four M310 input modules in Patchbay consoles.

M303 PB
Connector panel for eight M330 group modules in Patchbay consoles.

M309B
Connector panel for Patchbay consoles.

PATCHBAY SYSTEM M391

In-board patchpay system for 16 and 24 track recording applications having 480 pre-wired sockets. The patchbay occupies eight module spaces at the right-hand end of the frame. Construction includes all internal wiring to the modules and to the meterbridge rear panel. Six EDAC 90 pin connectors provide the interface for 24 track record/replay and Rack In/Out tie lines. The jack socket is TT (Bantam) type and uses three pole tip-ring-sleeve configuration. Circuits (except Rack In/Out) are normalised, each jack pair has an internal switch connecting the upper socket to the lower socket when no jack is present.

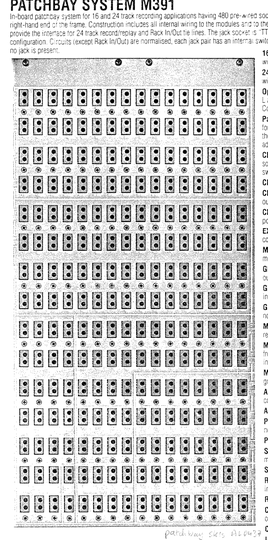

16 Track versions 32.16.16 and 40.16.16 are available, with stereo channel option.
24 Track versions 28.16.24 and 36.16.24 are available, with stereo channel option.
Optional Stereo channel facilities are included with L and R insertion points for up to four (max) M360 inputs. Connector panel M306PB is required for these inputs.
Part-Loaded Versions Patchbays are supplied pre-wired for the fully-loaded frame. Where modules are omitted then the relevant patchbay wiring will be included and will accept module addition at a later date.
CHANNEL LINE IN 1-40 from channel line in rear panel sockets normally connected internally to the line select switch on input sections.
CHANNEL LINE OUT 1-40 from channel direct output.
CHANNEL INSERT SEND 1-40 from channel insert point, output normally connected internally via:
CHANNEL INSERT RETURN 1-40 to the channel insert point input.
EXT 1-24 from group line in rear panel sockets normally connected internally via:
MON LINE IN 1-24 to the line select switch on the group monitor sections.
GROUP INSERT SEND 1-16 from the group insert point, output normally connected internally via
GROUP INSERT RETURN 1-16 to the group insert point input.
GROUP OUT 1-16 signal from main group outputs normally connected internally via:
MULTI-TRACK IN 1-24 to the associated tape tracks from rear panel multi-pin connector.
MULTI-TRACK OUT 1-24 are outputs from the tape tracks from rear panel multi-pin connector normally connected internally via.
MON TAPE IN 1-24 to the tape selector switches on the group monitor section and input section.
AUX 1-6 outputs from auxiliary masters normally connected internally via.
AUX 1-6 to the rear panel connectors.
PB1/PB2 rear panel sockets for stereo tape playback normally connected internally via:
PB1/PB2 to the tape inputs on monitor module M350
ST LS/CUE signals for studio monitoring from monitor normally connected internally via:
ST LS/CUE to studio LS and cue LS rear panel connectors.
RET 1-4 sockets on rear of mixer normally connected internally via.
RET 1-4 to the return input section of monitor module.
CR LS signals from main control room loudspeaker outputs of monitor, normally connected internally via.
CR LS to the main LS rear panel connectors.
L/R INSERT signals from L/R mix, normally connected internally via.
L/R INSERT to the insert return on the monitor L-R section.
OUTPUT L/R from the main L-R main outputs normally connected internally via:
OUTPUT L/R to the rear panel sockets.
MONO OUT from the mono sum output connected in parallel with the rear panel MONO connector.
OSC output from oscillator connected in parallel with the rear panel OSC connector.
PARALLEL is four jacks paralleled together to allow a signal to be split and sent to more than one location.
RACK IN 1-36 to rear panel multi-pin connector for inputs of external effects equipment. There is no normal connection between rack in and rack out.
RACK OUT 1-36 to rear panel multi-pin connector for outputs of external effects equipment. There is no normal connection between rack in and rack out.

USER DEFINED REMOTE SWITCH POSITIONS
Space is provided in the later area below the patchbay for up to ten user installed switches.

RECORDING PATCH BAY

CONNECTIONS: Rear connector panel M309B is supplied (8 module widths)

Group Outputs 1-24:	EDAC 90 pin connector. 24 balanced outputs. Group outputs 1 to 8 are duplicated as outputs 17 to 24.
Monitor Tape Inputs 1-24:	EDAC 90 pin connector. 24 balanced inputs to Channel and Monitor Tape Inputs 1-24.
Tape Inputs 25-40:	1/4 inch jack sockets. 16 balanced inputs to Channel Tape Inputs 25-40 (not via patchbay).
Rack In 1-24, 25-26:	2 EDAC 90 pin connectors. 26 balanced connections for external equipment inputs.
Rack Out 1-24, 25-36:	2 EDAC 90 pin connectors. 36 balanced connections for external equipment outputs.

All other console inputs and outputs are via rear panel jack and XLR connectors shown on "PS" version panel illustrations. Mating EDAC multipin connectors are available anc. if required should be included with the order for the console.

16 Track patchbay M390
There are 420 sockets and 4 multipin connectors. Full facilities are available for 32 channel 16 track operation and this version will be supplied as the standard large-frame 16 track patchbay unless the M391 version is specified. This original version of Saber patchbay will be replaced by the M391 system for all models.

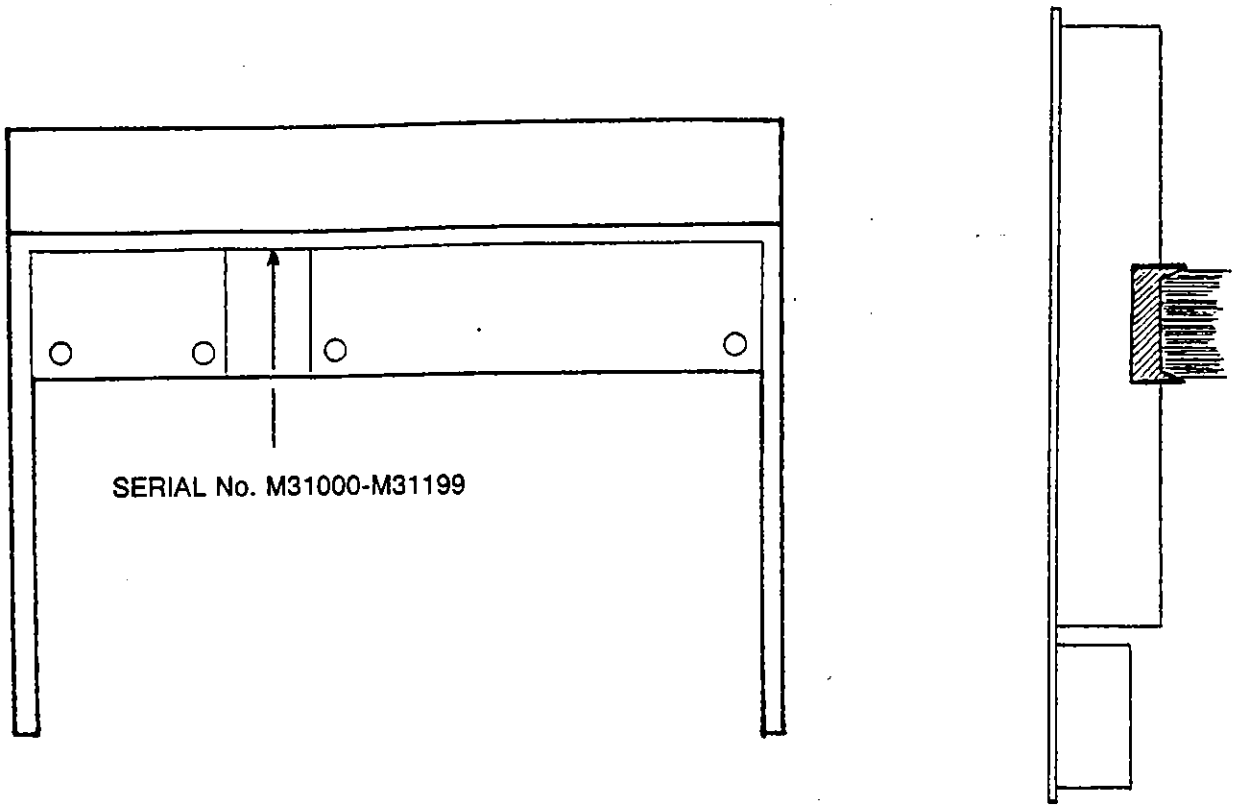
SERIAL No. M31000-M31199

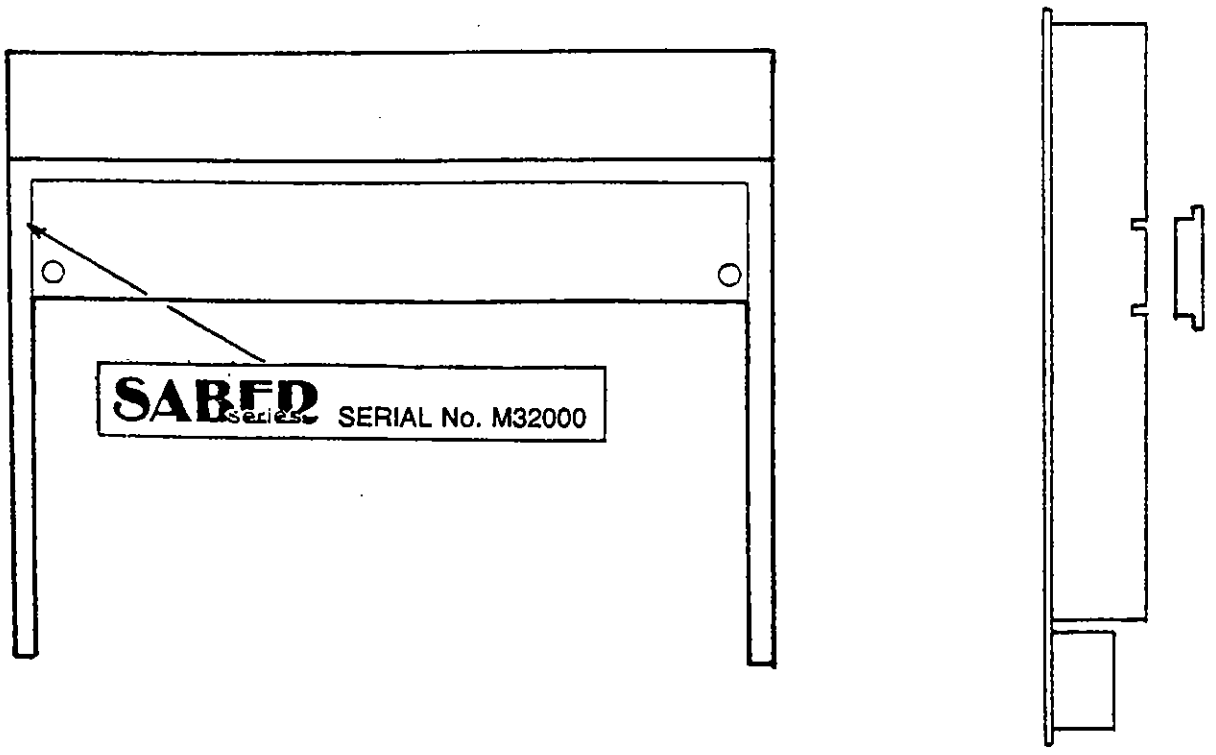
SABER
series
SERIAL No. M32000

Table of Contents

IMPORTANT: This document refers to SABER CONSOLES from serial number M32000 only.

1.0 Introduction and summary of CHANGES commencing with serial number M32000.
- 1.1 Maintenance programme
- 1.2 Service record
- 1.3 Technical bulletins
- 1.4 Guarantee and service policy
- 1.5 Accessories and options
- 1.6 Spare parts
- 1.7 Specification
- 1.8 Dimension drawings
- 1.9 Frame cross section

2.0 Module exchange
- 2.1 Module addition
- 2.2 Module removal and replacement
- 2.3 Customer options — M310, M330, M350, M325, M326, M355, M360

3.0 Adjustments
- 3.1 Meter calibration
- 3.2 Balanced output symmetry
- 3.3 Module assignment

4.0 Technical description
- 4.1 Console outline technical description
- 4.2 Check system PFL and solo
- 4.3 Audio mute element
- 4.4 Metering, VU
- 4.5 Metering, LED
- 4.6 Mute Processor system including MIDI
- 4.7 Power supply RPS4
- 4.8 24 Track Formats

5.0 Fault diagnosis - basic console fault finding
- 5.1 DC distribution
- 5.2 Smoke, fuses and sparks
- 5.3 Audio signal and DC measurements
- 5.4 LED meter fault diagnosis
- 5.5 Mute Processor fault diagnosis

6.0 Schematics and circuit diagrams

Title		Dwg No	Iss No
Allen & Heath Component reference diagram			
RPS4 PCB component identification		BW229	2
Power Supply RPS4 connections and circuit diagram		733	2
Master rear connector panel wiring	M302 (for M350)	739	2
Master rear connector panel wiring	M305 (for M355)	740	2
Rear connector panel wiring	M301/7 (for M310)	738	1
	M306 (for M360)	738	1
	M303 (for M330)	738	1
	M308 (for M335)	738	1
Rear connector panel wiring	M304 (for M325)	741	2
	M300 (for M326)	741	2
Main console buss allocation		743	1
Saber meterbridge wiring diagram		665	1
LED rectifier PCB component identification		BW223	1
LED display PCB component identification		BW223	1
LED master PCB component identification		BW223	1
LED meter circuit diagram		MBD189	5
Mute processor computer PCB component identification		BW224	1
Mute processor computer PCB circuit diagram		MBD190	3
Mute processor keyboard PCB component identification		BW225	1
Mute processor keyboard PCB circuit diagram		698	1
Mute processor slave PCB component identification		BW226	1
Mute processor slave PCB circuit diagram		A164	2
Mute processor wiring		663	1
Mute processor wiring (V4 software)		663	2
Input module M310.1 (X) component identification		BW353	2
Input module M310.1 (X) circuit diagram		723	3
Input module M310 (X) component identification		BW353	1
Input module M310 (X) circuit diagram		723	2
Input module M360 (pre EQ insert) component identification		BW368	2
Input module M360 (pre EQ insert) circuit diagram		730	2
Input module M360 component identification		BW368	1
Input module M360 circuit diagram		730	1
M360 RIAA module component identification		MBD111	1
M360 RIAA module circuit diagram		MBD111	1
Output module M320 component identification		See M330 Ident.	
Output module M320 circuit diagram		726	1
Output module M325 component identification		See M330 Ident.	
Output module M325 circuit diagram		728	1
Output module M325/6 meter identification		BW327	1
Output module M325/6 meter circuit diagram		666	1
Output module M326 component identification		BW371	1
Output module M326 circuit diagram		729	1
Output module M330 component identification		BW359-30	1
Output module M330 circuit diagram		725	1
Output module M335 component identification		BW359-35	1
Output module M335 circuit diagram		727	1

Title	Dwg No	Iss No
Monitor master module M350 L/R component identification	BW356	1
Monitor master module M350 L/R circuit diagram	724	1
Monitor master module M350 monitor component identification	BW362	1
Monitor master module M350 monitor circuit diagram	731	1
Monitor master module M355 L/R refer to M350		
Monitor master module M355 monitor component reference	BW365	1
Monitor master module M355 monitor circuit diagram	732	1
16 track patchbay M390:		
Assembly diagram	702	1
PCB Assembly drawing	703	1
PCB circuit position 1 & 2	681	1
PCB circuit position 3	682	2
PCB circuit position 4	684	1
PCB circuit position 5 to 16	683	1
24 track patchbay M391 PCB positions 1 to 4:		
PCB Assembly drawing	BW375	3
PCB circuits, see M390		
24 track patchbay M391 PCB positions 5 to 16:		
PCB Assembly drawing	BW378	1
PCB circuits positions 5 to 8	D035	1
PCB circuits positions 9 to 16	D036	1

1.0 INTRODUCTION

1. Scope

This manual contains technical information for purposes of adjustment, fault diagnosis, fault repair, and identification of replacement spare parts.

The contents apply to SABER RECORDING and SABER PA versions of the finished product.

When additions are made to the range of components there will be additional text released for technical purposes.

From time-to-time Technical Bulletins will be issued that are intended for addition to this manual. Because these may affect service proceedures the Technical Bulletin section is located at the beginning of this manual.

During the production life of the components of the SABER series it may be necessary from time-to-time to vary details of assembly to maintain performance, enhance performance or introduce variations. Should you find that the hardware in-field differs from the details shown here consider seeking verification from Allen & Heath direct prior to major service operations.

2. Method of Use

This manual is written for use by service personnel having skill in the use of the following equipment and techniques:

Hand Soldering tools and techniques
Voltage, current, and resistance measurement by multimeter instrument
Identification of components by reference code, colour code and function
Voltage measurement of audio and noise signals by precision AC meter
Voltage measurement using oscilloscope
Audio amplifier basic principles
Logic gate basic principles
Audio interconnection basic principles

Each component is illustrated in this manual by circuit diagram and component overlay drawing for pcbs. There is a technical description of common systems and systems unique to the SABER series.

In order to comply with warranty terms service work may be undertaken only by authorised Allen & Heath service agents during the period of warranty.

1.1 MAINTENANCE PROGRAMME: SABER, all versions

1.	**Routine maintenance schedule**	a) preventative maintenance to minimise wear and tear. Refer to Service Policy. b) replacement of Mute Processor RAM back-up battery. Recommended after 5 years operation. Refer to illustrations for Mute Processor Computer.
2.	**Performance proving and adjustment**	a) Meter calibration . Refer to section 3.1. b) Output symmetry. Refer to section 3.2. c) Audio system test. Refer to operators manual. Section "Check out". d) Verification of power supply operation. Refer to section 4.7.
3.	**Service Repair Schedule**	a) Electro mechanical parts as wear occurs, eg. faders and switches. No fixed schedule. b) Electromechanical and electronic component replacement in the event of failure.

1.2 SERVICE RECORD

Fault	Action	Date	Operator

1.3 TECHNICAL BULLETINS

Professional
Audio Equipment

TECHNICAL BULLETIN

ATTENTION SERVICE DEPARTMENT

Ref: SABER 03

Interconnection for optimum signal to noise performance.

Saber input connections for Tape and Line inputs are balanced.

Connections to external equipment, eg tape recorders and effects units can be made in balanced or unbalanced configurations.

In both cases always make a connection to both signal phases of the input connector as shown below.

This prevents crosstalk which can be picked up by an unterminated input phase connection.

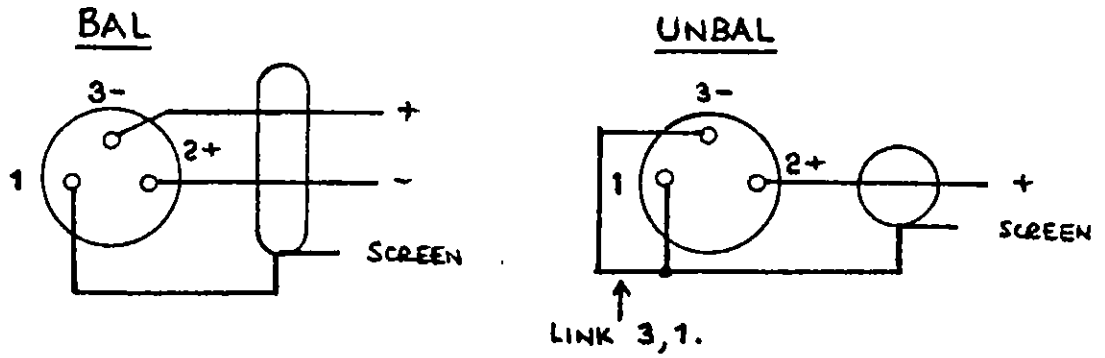

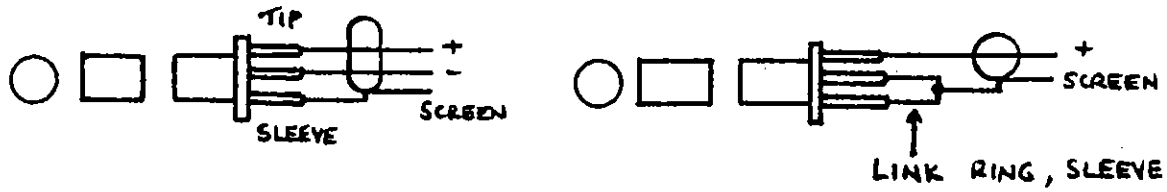

Ted Rook
Allen & Heath, Brighton

19th January 1989

TECHNICAL BULLETIN

ATTENTION SERVICE DEPARTMENT

Ref: SABER 07 CORRECTIONS TO OWNER MANUAL.

Section 1.4 page 1, Check out

Para 3)	Add at the end: Release OSC L-R.
Para 4)	Use the monitor mutes to turn off each in turn rather than closing each group fader. At the end of the test there should be 16 muted monitors.
Para 5)	Routing to groups 9 to 16 requires use of the SHIFT pushbutton.
Para 6)	Add at the beginning; Release OSC SLATE and check that monitors 1-16 are muted.

Section 2.1.1. Page 2 Solo - in - place:

The first paragraph should be ignored . Solo - in - place is correctly described in the second paragraph.

Section 3.1 Page 3 Multipin connector part numbers:

for plug body 516 040 000 301
read 516 090 301

Ted Rook
Allen & Heath,

31st August 1989

TECHNICAL BULLETIN

ATTENTION SERVICE DEPARTMENT

Ref: SABER 08

SABER: all versions RPS4 AC Fuse Rating Change

In European applications the front panel AC input fuse required has been changed:

OLD	NEW	NEW STOCK NUMBER
1 A.T.	1.6 A.T.	AL0466

Some units in field having RPS4 supply are fitted with fuse rating 2.5 A because 1.6 A was not in stock. In the event of service attention being required please fit the correct 1.6 A fuse rating.

The American fuse rating (100/110v) remains unaffected.

TECHNICAL BULLETIN

ATTENTION SERVICE DEPARTMENTS

FILE WITH SABER SERVICE MANUAL

Ref: Saber 09 Saber Mute Fault Diagnosis: Central CPU fault.

INTRODUCTION: This note has been prepared to aid fault diagnosis of this extremely rare fault. Most Mute Processor faults are not in the main board and are repairable by attention to the wiring and components of the module and slave board assemblies.

SYMPTOMS: Module mute switches "frozen". Pushbutton operation gives no change from ON to OFF to ON. Control panel "frozen" operation of keys gives no response. "RECORD" and "SHIFT" LEDS may be permanently ON.

1. Check power supply DC outputs are normal.

2. Switch off the Power Supply, then switch on again, expect a reset.

3. Check the Mute Processor +5v DC regulator is normal.

4. Disconnect at the main computer board ribbon cable PL4, Slave address. This isolates the CPU from a possible fault on the slave bus address chips. Make a power off/on reset. Notice if normalcontrol panel operation is returned. Modules mutes will be "frozen".

5. Reconnect the slave bus PL4.
Disconnect the control panel connector, at the control panel end. This isolates the CPU from a control panel fault. Make a power off/on reset. Notice whether normal mute operation is restored.

6. Replace the main computer EEPROM, or if none available then remove and replace it. This would reveal a faulty socket connection. Power off/on reset. **Note:** The symptoms of EEPROM failure, are similar to the symptoms of CPU failure. It is necessary to make this test to check for EEPROM failure.

7. With the console switched on make a forced reset. Connect together for one or two seconds pins 9 and 40 of main computer IC1 8031. Notice if conditions shown on the mute LEDS or control panel change.

The control panel lock-up is a strong diagnostic clue about the condition of the processor. LEDS "RECORD" and "SHIFT" are drive directly by the CPU, not via any buttering.

CONCLUSION: When all the tests 1-7 give a persistant fault then the cause of the problem is on the main computer board.

Replace the computer board or the complete teat panel assembly.

NOTE: Mute Processor faults that effect channels in blocks of eight (ch 1-8, 17-24, Returns 1-4, Monitors 9-16 etc.) are a result of slave board problems and not CPU problems.

Mute faults limited to one or two modules are usually the result of disturbance to the connections between slace boards and modules.

Ted Rook
Allen & Heath,

8th December 1989

TECHNICAL BULLETIN

ATTENTION SERVICE DEPARTMENTS

FILE WITH SABER SERVICE MANUAL

Ref: Saber 10

Standard Saber power supply: RPS4.

Commencing with serial number M32000 in Autumn 1989 power supply model RPS4 bacame the standard supply for all Saber models.

For service and exchange purposes there are similarities with the RPS3 which accompanied units from serial number M31001.

It is permissable to use RPS4 as a service replacement for RPS3.

It is not permissable to use RPS3 as a service replacement for RPS4.

Summary of differences	RPS3	RPS4
Output current rating	3 A DC	5 A DC
AC Input panel fuse rating	1 A antisurge	1.6 A antisurge
AC pcb fuse rating	4 A antisurge	6.3 A antisurge
Pcb assembly details	BW222 issue 2	BW229
Circuit diagram	694 issue 2	733
Ov to Earth link option	not fitted	fitted to rear panel

Ted Rook
Allen & Heath,

13th December 1989

TECHNICAL BULLETIN

ATTENTION SERVICE DEPARTMENTS

FILE WITH SABER SERVICE MANUAL **SERIAL NO M32000 ONWARDS**

Ref: Saber 11 Changes introduced starting at serial number M32000

ITEM	DETAIL OF CHANGE
Module bussbar harness	now fixed within mainframe
Module edge connector	direct type, gold contacts
Service extender	Stock number AL0454
Power Supply	RPS4, 5 amp rating
Module Assemblies	product codes ZX300 - 7XX etc.
Performance specification	refer to brochure 1990
L-R summing system	now balanced bussbars
Mute Processor	Software V3.1 P/R includes note on/off option
Circuit details, all modules	service manual (blue back) AP0103

The introduction of these changes makes possible performance improvements for the SABER CONSOLE which are given in the SPECIFICATION.

Modules and console frames before and after serial number M32000 CANNOT BE INTERCHANGED.

When service to a SABER console is required be sure you have the correct service manual, parts etc. Ask the customer to look at the rear of the console. When you see the label shown below the type of console is "second - generation" starting M32000.



TECHNICAL BULLETIN

ATTENTION SERVICE DEPARTMENTS

FILE WITH SABER SERVICE MANUAL

Ref: Saber 12

Warranty Service Exchange RPS3 power supply

Power Supply RPS3 has been found to show a fault **when in use with LED Bargraph consoles.**

The fault symptom is either

a) failure of the -16v DC supply on power-up following AC power switch on. Front panel -16v LED not lit.

b) delay in turn on of the -16v DC supply on power up. A delay between 0.25 to 1 second may occur.

When this occurs damage can result in the M350 master module to the +/- 7.5v DC logic supply regulation transistor and/or the 4066 CMOS logic gates in the audio path.

A modified version of RPS3 designated RPS3B is avilable and which performs satisfactorily.

ACTION REQUIRED

1. In order to avoid reliability problems, Allen & Heath offers an exchange service for RPS3 units that are installed with "BG" consoles.

2. Complete the exchange claim form attached "RPS3B CLAIM" and fax or mail it to the Allen & Heath Technical Services Department.

Mail: Allen & Heath Brenell Ltd
Kernick Industrial Estate
Penryn
Cornwall
TR10 9LU

Fax: (0326) 377097 Tel: (0326) 372070

3. Await arrival of the RPS3B exchange unit.
Remove the RPS3, repack it in the same carton.
Check the correct AC supply voltage has been selected.
Install the RPS3B

4. Despatch the RPS3 unit to the Allen & Heath mail address above.

TECHNICAL BULLETIN 12 Cont'd

Alternative Action:

Service agents may wish to undertake modification of the RPS3 regulator pcb assembly.

The data sheet attached (ref CD 2.2.90) gives details. Note the short circuit test requirement. Units should also be recalibrated for output voltage off-load +/- 16v, + or - 0.25v and the PCB AC fuses F2,F3 replaced with the correct rating, 5A antisurge.

Applications Note:

RPS3B supplies are rated at 4A DC output current. This is not sufficient to drive "second generation" consoles commencing serial no M32000. Use RPS4 only.

Ted Rook
Allen & Heath,

7th February 1990

SUPPLEMENT TO TECHNICAL BULLETIN 12

Ref: Saber RPS3B CD 2/2/90

The RPS3B power supply differs from the standard RPS3 unit in that it has short circuit current limit at 4 Amps instead of foldback current limit. This ensures that the negative rail powers up reliably on switch-on when connected to a heavy capacitive load such as that presented by the large Bargraph Saber.

The following modifications are required to convert a standard RPS3 power supply to the revised RPS3B:

1. Remove R6, R8, R15, R17

2. Replace R7 and R16 with links

3. Replace R9 and R18 with 0.33R//0.33R parallel pairs AC0352 x 4

4. Replace 4 amp DC fuses with 5 Amp anti-surge 20mm

5. Mark label as RPS3B and re-serialise (if applicable)

Units modified by the factory are re-serialised as: **P91xxx**
The unit is tested for a 5 second short-circuit at 3.8 to 4.0 Amps.

PLEASE COMPLETE SECTIONS 1-3

PHOTOCOPY AS REQUIRED

KEEP A COPY

MAIL OR FAX TO ALLEN & HEATH TECHNICAL SERVICES

Professional Audio Equipment

R P S 3 B C L A I M

1. Allen & Heath Agent
   Name:
   Address:

   Telephone:
   Fax:
   Contact Name:

2. End User Installation
   Name:
   Address:

   Telephone:
   Fax:
   Contact Name:

3. Saber Console
   Format:
   Serial Number:

NO CLAIM WILL BE PROCESSED UNLESS THE FORMAT OR SERIAL NUMBER IS GIVEN.

4. For Allen & Heath Use.

RPS3B Despatched to	Agent Serial Number Date Carrier	End User
RPS3 Received from	Agent Serial Number Date Carrier	End User

Remarks:

TECNICAL BULLETIN

ATTENTION SERVICE DEPARTMENTS

FILE WITH SABER SERVICE MANUAL
REF SABER 13

INCREASED LIFE OF VU METER LAMPS

AS FROM 5TH JUNE 1990, SABERS FITTED WITH VU METERING HAVE 47R RESISTORS WIRED IN SERIES WITH THE LAMPS AS SHOWN BELOW.

VU TYPE SABERS MANUFACTURED BEFORE THIS TIME SHOULD BE MODIFIED IN THE SAME WAY. THIS CAN BE DONE DURING ROUTINE LAMP REPLACEMENT.

16 TRACK METERPOD REQUIRES 9 X 47R 1/4W 5% RESISTORS
24 TRACK METERPOD REQUIRES 13 X 47R 1/4W 5% RESISTORS

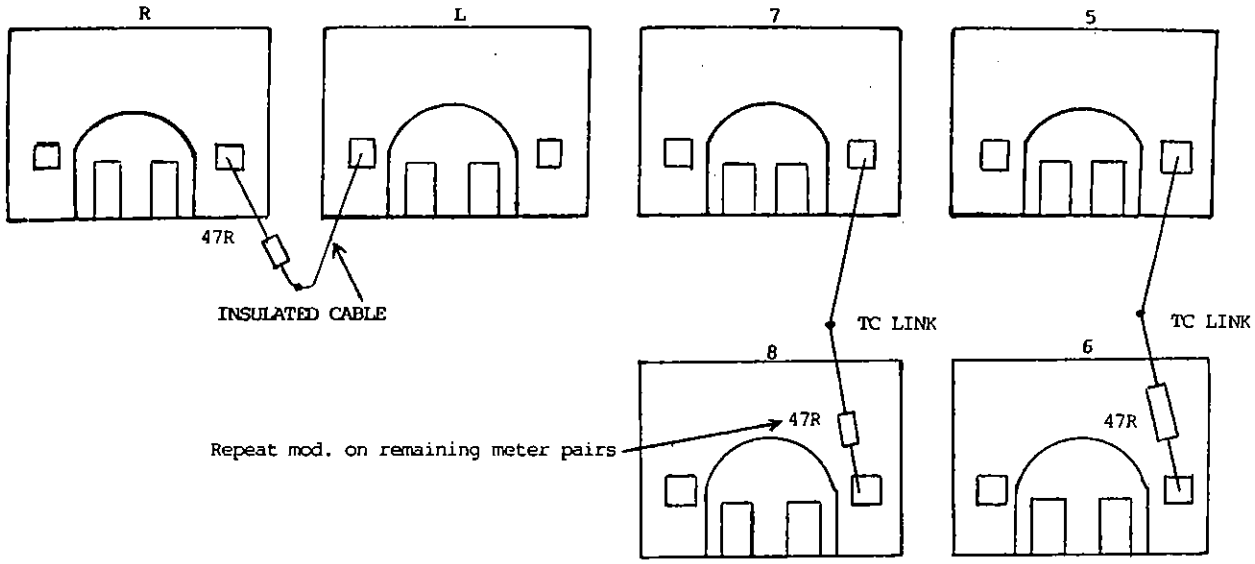

TECHNICAL BULLETIN

ATTENTION SERVICE DEPARTMENT

FILE WITH SABER SERVICE MANUAL M32000

Ref Saber 14

INCREASED RELIABILITY OF SABER POWER SUPPLY RPS4

This note applies only to SABER consoles between M32000 - M32098 and to the RPS4 power supply.
It does not apply to other serial numbers or RPS3 power supply.

WHEN A POWER SUPPLY RPS4 BECOMES FAULTY FOR ANY REASON THE REPAIR TO THE POWER SUPPLY SHOULD INCLUDE THE CIRCUIT MODIFICATIONS DETAILED BELOW WHICH GIVE INCREASED RELIABILITY.

Note: Commencing serial number M32099 the modifications for increased reliability are fitted during production of the console.

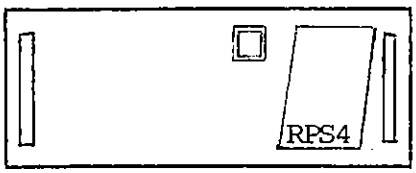

M32000 - M32098

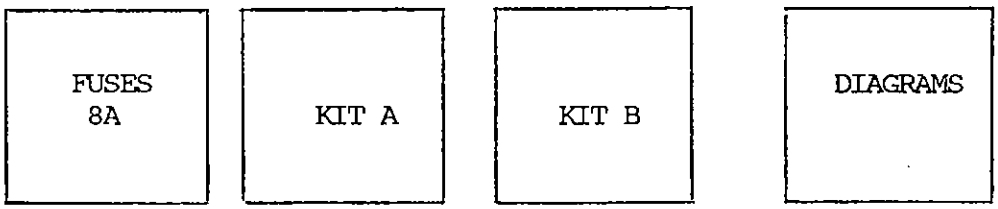

SABER RPS4 retro-fit kit ZX300 721

INSTRUCTIONS

1. Modify the regulator pcb inside the RPS4 unit. Use the SABER RPS4 retrofit kit parts and instructions supplied, ref ZX300 721.
The additional components supplied should be fitted to the trackside of the PCB assembly.
Parts supplied:

Kit A	short circuit	2 off
Kit B	overvoltage spike	2 off
Fuses	8 A	2 off
RPS4	circuit 733 iss. 2	
Assembly diagrams kit A and Kit B.		

2. Change F102, F103 to 8A type.

3. Following modification test the RPS4 for correct output voltage operation before connecting to the console.

4. Re-order the retrofit kit from Allen & Heath, ref. ZX 300 721

SUMMARY OF BENEFITS AND EXPLANATION

1. Fuse rating increase from 6.3A to 8A is necessary for the latest extra-large size frame Saber consoles and for large frame console operating with high input voltages (240 - 250 V AC). Note that these internal pcb fuses are low voltage AC operation and not DC output fuses.

2. The RPS4 now includes the following protection:

   A. SHORT-CIRCUIT - Up to 1 second - current limit at 6A. Longer than 1 second - rail shuts down safe. Reset requires removal of mains, 4 second delay, then switch on. Modification kit A provides protection for the pass transistors when an output short-circuit continues indefinitely.

   B. OVERVOLTAGE - Thyristor triggers at 19V shorting the output. Invokes short circuit protection. Rail shuts down safe. Reset requires removal of mains, 4 second delay, then switch on. The modification kit B prevents interference spikes from the AC input from causing overvoltage protection to be triggered unnecessarily.

   C. OVER-CURRENT - Rail current limits at 6A. Excessive current demand will blow the 8 amp fuse.

TR.

T.R.
Allen & Heath,

4th July 1990

TECHNICAL BULLETIN

ATTENTION SERVICE DEPARTMENT

FILE WITH SABER SERVICE MANUAL M32000

Ref Saber 15

SABER Serial number M32000 - M32098 Modification to M350 Monitor PFL Circuit

CIRCUIT DESCRIPTION

The following modification prevents the possible failure of IC10, 4066, and the Q9, Q10 transistor pair in the event of a power supply failure. This may occur if one of the 16V rails fails short circuit.

Q9 and Q10 provide the +/-7.5V supply to the 4066 devices. At present this is derived by means of an attenuator across the +/-16V rails. The modification now references the +/-7.5V power supply from each 16V rail to 0V.

Also, a resistor is added to the Q6, Q7 PFL switching circuit to prevent the "B" control voltage exceeding the supply to the 4066 IC10.

INSTRUCTIONS

The modification involves component removal and insertion on the monitor PCB AG0214 issue 1. This may be carried out with the M350 module removed from the console, and with the monitor PCB in place in the module.

PARTS REQUIRED:			
	AC0039	2K2 1/4W5% resistor	x4
	AC0045	8K2 1/4W5% resistor	x1
	AF0208	47uF 25V capacitor	x2

Refer to sheet 2 for the assembly details.

Figure 1 shows the change to the 7.5V driver circuit which is part of the service manual circuit 731 issue 1(bottom LHS).

Figure 2 shows the modification required to the PCB layout around Q9, Q10, drawing BW362 (above edge connector).

Figure 3 shows the additional 8K2 resistor required in the PFL switch circuit, drawing 731 issue 1 (LHS). Figure 4 shows the layout change, drawing BW362 (LHS behind TB mic).

This modification is standard in all Saber recording consoles from serial number M32099.

It is recommended as a reliability improvement to Sabers in the field and may be made during a suitable service visit or following damage to this circuit.

C.D./T.R.
Allen & Heath,

6th July 1990

CD 20-6-90

MODIFICATION TO M350 MONITOR

figure 1

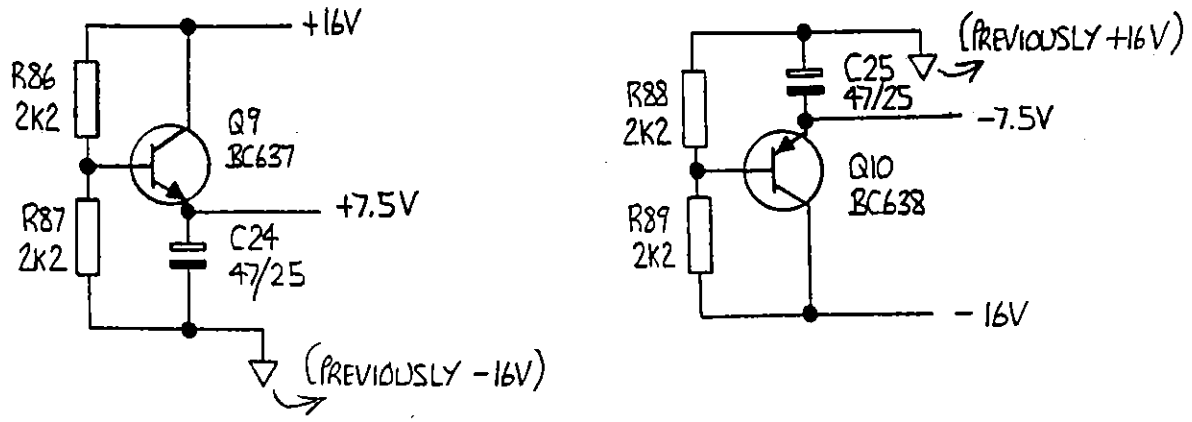

figure 2

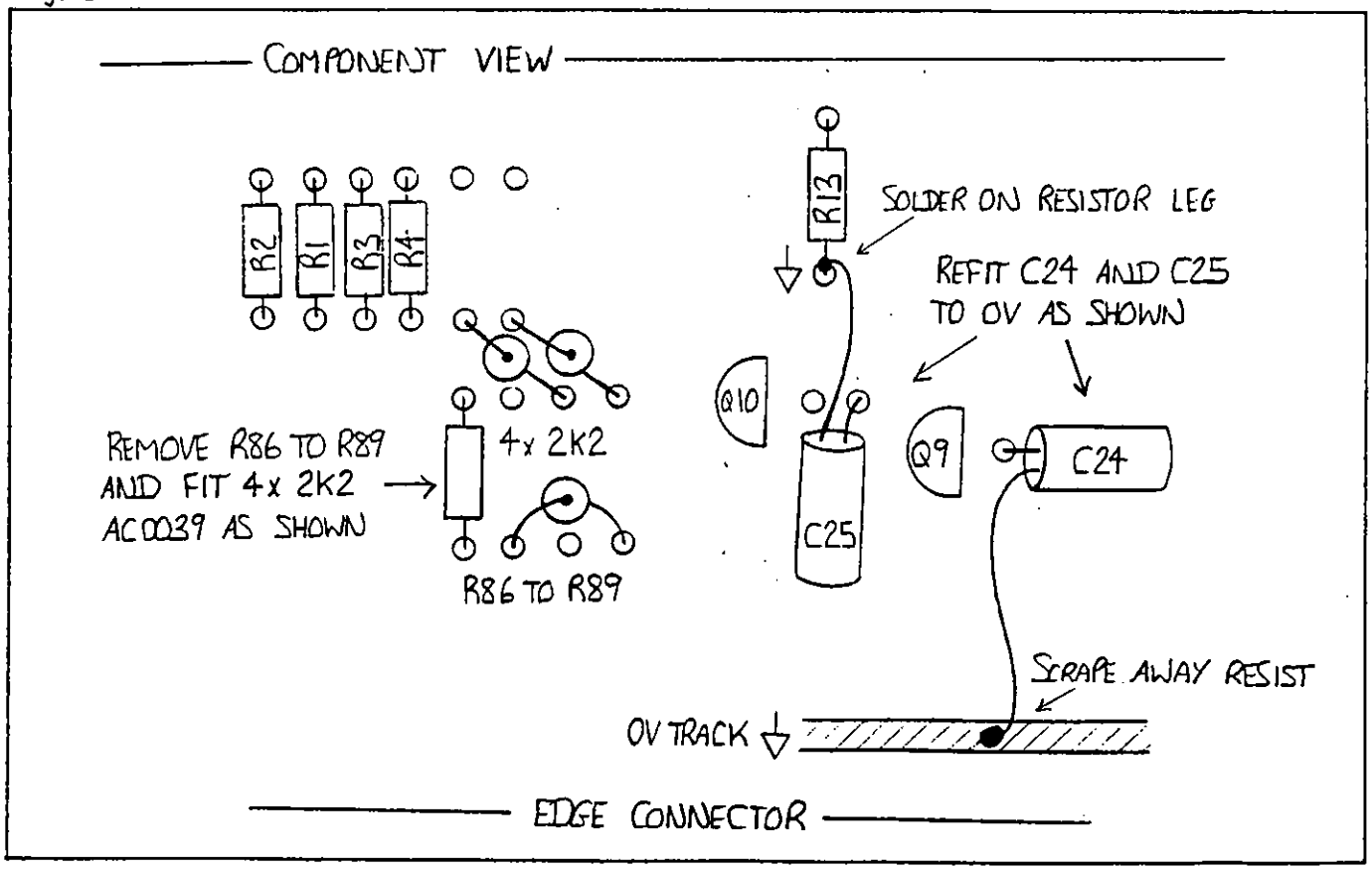

figure 3

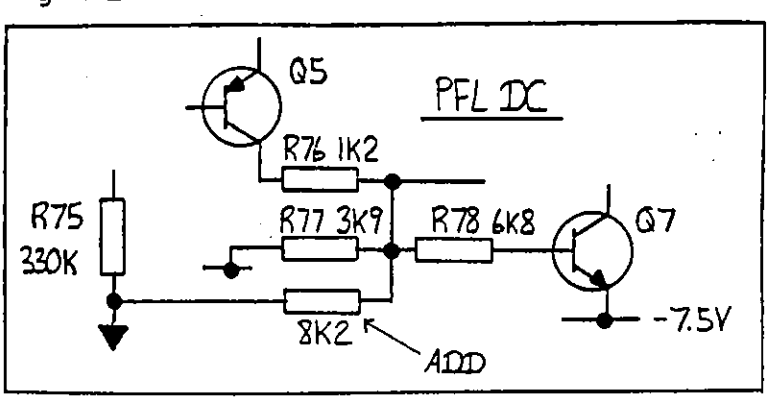

Figure 4

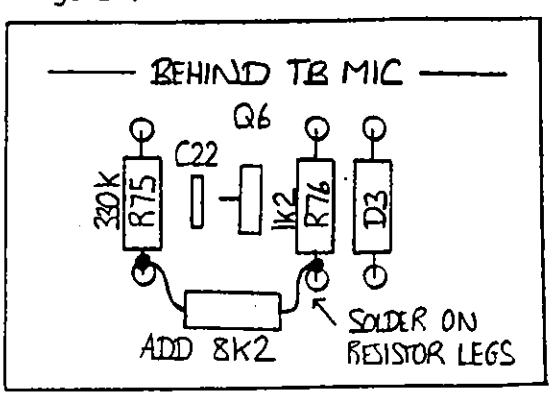

Attention Service Departments

TECHNICAL BULLETIN 16

SABER: TALKBACK SWITCHING, OPTIONAL PERFORMANCE ENHANCEMENT.

Description

In response to customer demand a modification has been developed which gives a reduction to the amount of switching noise that occurs on use of the TALK key. The internal microphone connections are changed so that the microphone bias supply is obtained from the console main positive DC supply instead of the local +7.5v DC supply.

Procedure Parts required: Resistor 10Kohm, 1/4W, 5% 2 off

1. Remove the Master Module M350

2. Desolder from the pcb the RED microphone connection wire shown on the diagram.

3. Add two components to the circuit board as follows:
Form the 10K resistors into the pattern shown and attach them to the component side of the circuit board.

4. Connect the RED microphone wire to the junction of the two resistors as shown on the diagram.

5. Replace the module in the console.

6. Consoles having serial numbers above M32150 already include this change.

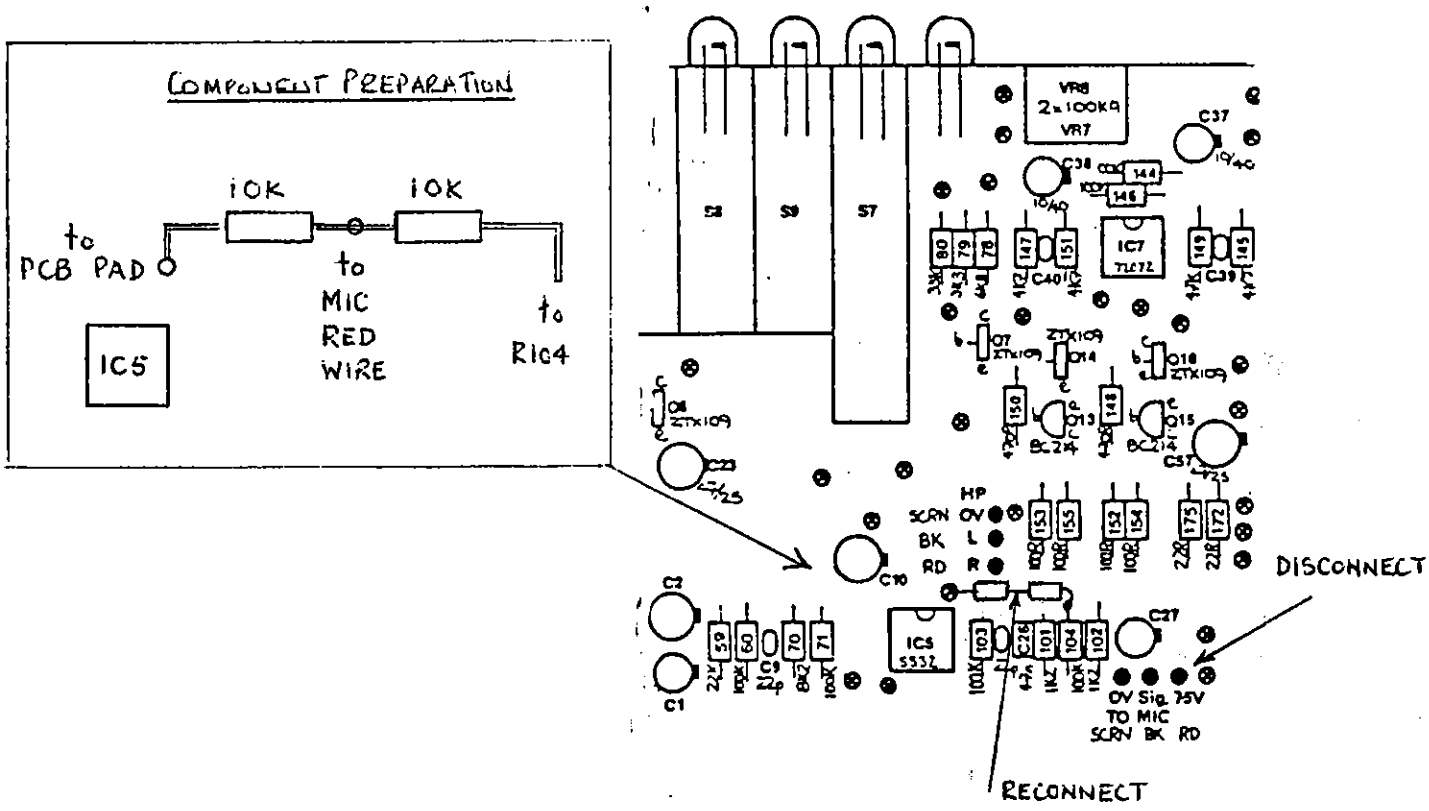

Allen & Heath **26th September 1990**

TECHNICAL BULLETIN 17

ATTENTION SERVICE DEPARTMENT

FILE WITH SABER SERVICE MANUAL

REF: SABER 17

SABER SERVICE PART NUMBER CORRECTION

Applicable to serial number M32000 and above

Item	Published Order Code	Correct Order Code
Mute Processor PCB Assembley	ZX100 085	ZX300 054

The published order code is found in SABER Service Manuals.

Please amend the spare parts list in your SABER Service Manual.

ZX100 085 is the correct part for SIGMA and early SABER consoles from serial number M31000 to M31199. It used 2716 EEPROM and software versions SIGMA and MCM VI.

ZX300 054 has greater RAM capacity and is configured to operate with the version 3 or higher software contained in the 2764 EEPROM. It is used with SABER consoles from serial number M32000 onwards.

Allen & Heath **February 1991**

TECHNICAL BULLETIN

Professional
Audio Equipment

Attention Service Departments

File with SABER SERVICE MANUAL M32000 onwards

Ref: SABER 18

Input module M310.1. introduced.
Mute Processor V4 software introduced.

Commencing in Spring 1991 deliveries will include M310.1 channel modules in place of the M310 standard type. At the same time the Mute Processor has been fitted with the V4 Mute Automation software package in place of the previous V3.1 P/R version.

There is no change to the serial number sequence.

You can recognise these consoles from the input identification number M310.1 near the faders.

The M310.1 module is electrically and mechanically interchangeable with the M310 type for consoles after serial number M32000.

The M310.1 module is not available for consoles below serial number M32000.

Information Sheet CD 1-2-91 gives technical details which allow conversion of the EQ performance of existing consoles to the new M310.1 type. New components may be obtained locally or ordered from Allen & Heath.

SABER SERVICE MANUALS:	Deliveries commencing March 1991 will include Service Information for both M310 and M310.1 modules.

Refer also to sheet 2 for further details.

TECHNICAL BULLETIN SABER 18 CONTINUED

ITEM	CONSOLE DETAILS	
	Input Module	**Input Module**
Module Code	M310	M310.1
EQ on LED	No	Yes
Signal Presence LED	No	Yes
MF Sweep Range	10:1	20:1
HF Corner Frequency	6k/12k	8k/16k
LF Corner Frequency	70/140Hz	40/80Hz
Input Gain	Normal	Increased 3dB
Input preamp ICI	TL072	NE5532
Input Transistor	BC214 x 6	2N4403 x 2
Noise Performance	-127dBm	-127dBm
Resistor Tolerance	5%	1%
Circuit Diagram	723 issue 2	723 issue 3
PCB Assembly Diagram	BW 353	BW 353 issue 2
PCB Reference	AG 0210 issue1	AG 0210 issue 1
V4 Software		
Mute Processor PCB Assembly	ZX300 054	No Change
EEPROM	2764 V3.1	2764 V4.0
Mute Owner Manual	V3.1 AP0106	V4.0 AP0109
Frame Wiring Circuit	663 issue 1	663 issue 2
M302 Connector Panel Wiring	Normal	Return 1 - 4 mute connections changed
MIDI Note/Mute Translation	Unique to each console	Standard System for every console

TECHNICAL BULLETIN 19

Professional Audio Equipment

Attention Service Departments

File with Saber Service Manual

NEW STANDARD PARTS: Low Noise Pre-amp Transistors

Two new types of input pre-amp transistor have been introduced. These are used in place of the regular BC214C type. Only two transistors are fitted, in place of four or six BC214C. The performance specification is maintained or improved and the component count is reduced.

For servicing you will require stocks of both the original part for fitting into older mixers and new parts for newer mixers.

	Original Part	New Part	New Part
Part Number	BC214C	2N5087	2N4403
Part Description	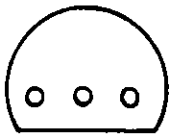	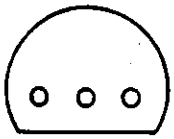	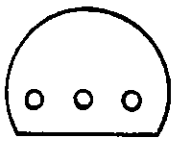
	E B C	C B E	C B E
	PNP Low noise	PNP Ultra low noise	PNP Ultra low noise
Application	Input pre-amp	Input pre-amp	Input pre-amp
	4 or 6 pcs	2 pcs	2 pcs
Product type	Sigma SR plus Studio 12 System 8 Saber	Scepter	SC plus Series 200 Saber
Stock Number	AE0031	AE0305	AE0273

Recommendation: Order stocks of the new parts in advance of service requirements.

When making service replacements always fit the same type part.

SABER

TECHNICAL BULLETIN 20

ALLEN & HEATH
Professional Audio Equipment

Attention Service Department

File with Saber Service Manual M32000 onwards
(This does not apply to 1st generation Sabers before Serial Number M32000)

M360 Stereo Input Module Insert Change

All M360 Stereo Input Modules supplied from Mixer Serial Number M32000 to Serial Number M32197 had post equaliser insert sends. From M32197 onwards (March 1991) this was changed to pre equaliser insert and return.

Below is a list of instructions for modifying older M360 modules to the new specification:

Parts required: Two off 100K 1/4W 5% resistors (our code AC0064)
Two off 22R 1/4W 5% resistors (our code AC0004)
Link wire 20cm
PCV sleeving 1.5mm 20cm

Refer to component overlay diagram enclosed.

1. Remove R108 and R109, 2 x 22R, in middle of PCB.
2. Remove 6 track pins in middle of PCB marked "X".
3. Remove 2 track pins near C10, C12, at right end also marked "X".
4. Insert and solder right hand ends of R108, 109 (new 22R resistors).
5. Sleeve and solder other ends of 22R resistors to top side pads only.
6. Sleeve and solder two links "A" both sides of PCB.
7. Viewed from trackside, i.e. non component side, insert and sleeve left hand ends of links "B" (shown in square) and solder on both sides. Solder right hand ends on trackside only.
   Cut tracks leading to pads at the left hand end of links "B".
8. On component side, right hand end, insert the two 100K resistors into the pin holes below C10 and C12 and solder on both sides.
9. Stand these resistors (now numbered R72, R73 on the new circuit provided) up on end and form the leads to touch adjacent resistor legs of R20 and R22. Solder these together.
10. Test for correct operation.

4th July 1991

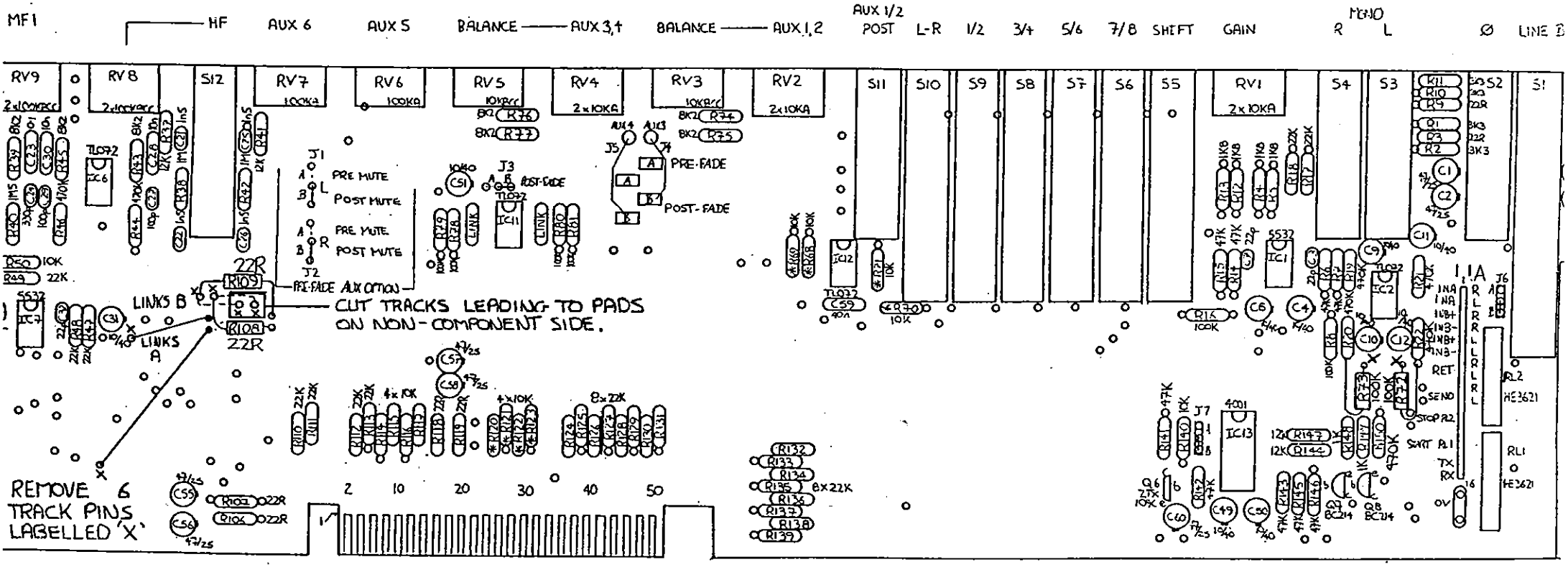

ALLEN + HEATH LTD

SABER STEREO INPUT PCB AGOZ11 ISSUE 1 M360 MODULE.

DRAWING No: BW 368 ISSUE 2

1.4 GUARANTEE

Saber products are made in the U.K. by ALLEN & HEATH BRENELL LTD, and are guaranteed against defective parts and workmanship for a period of ONE YEAR from the date of purchase by the original owner.

The defective component or module should be returned to Allen & Heath or its authorised agent and subject to the following conditions will be repaired or at our option replaced free of charge for labour and materials.

Conditions:

1) The equipment has been installed and operated in accordance with the instructions in the Operators Manual

2) The equipment has not been subject to abuse, neglect or alteration other than described in the Operators Manual

3) Any necessary adjustment, alteration or repair has been made by Allen and Heath or it authorised agent

4) The defect must be notified promptly

5) The defective item is to be returned carriage prepaid to Allen and Heath or its authorised agent and proof of purchase made available on request

Units to be returned should only be packed in the original AHB packing and be accompanied by the Power Unit

These terms of guarantee apply to U.K. sales. In other territories, the terms may vary according to legal requirements.

Factory:

ALLEN & HEATH Ltd.
Kernick Industrial Estate,
Penryn,
Falmouth,
Cornwall.
TR10 9LU.
UNITED KINGDOM.

Tel: +44 (0) 326 372070.
Fax: +44 (0) 326 377097.

Service Policy and Spare Parts

Allen & Heath products are designed to give trouble free service with the minimum of attention. Repair under warranty is the reponsibility of the selling agent who has been equipped with spare parts and technical manuals, and has the relevent repair equipment and service personnel.

In territories outside the U.K. refer to the selling agent for details of service and repair procedures.

Outside warranty, owners may use the services of the service agent or undertake service themselves. Spare parts and manuals are chargeable.

Service item availability:

Owner manual	- order **Saber Recording Owner Manual** OR **Saber P.A. Owner Manual**
Technical Manual	- order **Saber Service Manual S/No M31000-199 AP0083** **S/No M32000- AP0103**
Spare Parts	- order **Saber Spares Kit ZX300 068** individual spare parts available to order. order **Spare Modules and PSU** contact sales agent
Technical Support	- contact **Sales Agent** first if problems arise contact Allen & Heath
Packing	- cartons for module shipping are available on request

Preventive Maintenance

Owners can prolong the service life of the equipment and minimise service costs by attention to a few simple points:

Protect the operating surface of the console from liquid spillage

During building/moving operations, cover the console to protect it from dust entry and accidental damage

Clean the controls and panels using a cloth dampened with a little dilute detergent. Avoid the use of aerosol and liquid solvent cleaners. Avoid the use of abrasive cleaning materials. The white write-on strip slides off for cleaning purposes

Ensure that your power supply is installed with adequate support and free air flow from below to provide ventilation for cooling. Do not expect a power supply sitting on carpeted floor to remain at normal operating temperature indefinitely. Do not use any other type of power supply than the one supplied with the console, type RPS4.

Do not attempt module removal while the console is switched on. This is to avoid accidental short circuit damage when parts touch each other.

1.5 Accessories and Options

Items for consoles serial no. M32000 onwards

	Description	Order Code
M310-1	Input Module	ZX300-704
M310-1X	Input Module	ZX300-705

The above modules are compatible with and replace M310 and M310X modules. Except for consoles Serial Number M31000-199 (see list below)

M360	Stereo input module	ZX300-706
M330	Group module (dual group)	ZX300-708
M335	Dual Monitor	ZX300-709
M326	P.A. Matrix output module	ZX300-711
M350	Recording master module	ZX300-712
M355	Live sound master module	ZX300-713
	Single module blank	ZX300-074
	4 way module blank	ZX300-049
M301	8 way input connector panel	ZX300-004
M301PB	8 way input connector panel for PB	ZX300-055
M306	4 way stereo input connector panel	ZX300-058
M306PB	4 way stereo input connector panel for PB	ZX300-124
M307	4 way input connector panel	ZX300-066
M307PB	4 way input connector panel for PB	ZX300-067
M308	4 way dual monitor connector panel	ZX300-071
M308PB	4 way dual monitor connector panel for PB	ZX300
RPS4	Rack mounting power supply 240V	ZX300-715
	8 way connector blank panel	ZX300-060
	Service Manual	AP0103

Items for console serial no. M31000 - 199

M310	Input module	ZX300-601
M310X	Input module	ZX300-602
M360	Stereo input module	ZX300-609
M320	Group module (single group)	ZX300-603
M330	Group module (dual group)	ZX300-604
M335	Dual monitor	ZX300-621
M325	P.A. output module	ZX300-606
M350	Recording master module	ZX300-605
M355	Live sound master module	ZX300-616
RPS3	Rack mount power supply	ZX300-607
	Service Manual	AP0083 iss.2

Orders for individual modules MUST be accompanied by the serial number of the console.

When ordering individual modules give the function number of the module eg input 25, so that the correct numbered mute buttons may be fitted. For the service - return of complete modules a custom packing carton is available on request for a small charge.

1.6 Ordering Spare Parts

1. Standard Saber Spares Kit: Order Code - **Saber Standard Spares Issue 2 ZX300-068.** All items listed below are included in a cabinet of drawers. The purpose is to enable in-field service repairs to recording and live sound versions by component replacement independant of Allen & Heath's factory. Common resistors, capacitors and soldering equipment are not supplied.

2. Individual spare parts from the list may be ordered. Please include order reference code for the part required.

3. This list replaces the list in the owner manuals dated October 1988, and is suitable for all Saber units produced.

Description		Order Code	Qty
Fader, Alps 100 mm, 10k, log		AI0091	5
Fader Knob		AJ0048	5
Fader Screw, M3 CSK		AB0215	10
Module	Fixing Screws - Countersunk Head 6AB	AB0195	10
	Pan Head 6AB	AB0170	10
	Spire Clip (Nut clip) 6AB	AB0258	10
	Pan Head 4AB, module assembly	AB0057	10
	Joint block, Nylon, A138	AB0253	5
Pots	- STEREO GAIN, Alps 10k A x 2 AHB 18	AI0119 (+ Nut)	5
	- GAIN, Alps 10k C AHB 3	AI0053 (+ Nut)	5
	- LEVEL, Alps 100k AHB 4	AI0054 (+ Nut)	5
	- STEREO LEVEL, Alps 100k A x 2 AHB 5	AI0055 (+ Nut)	5
	- HF, LF, EQ, Alps, 100k B, CC AHB 2	AI0052 (+ Nut)	5
	- MF, SWEEP, Alps, 100k C x 2, AHB 15	AI0130 (+ Nut)	5
	- LEVEL, Alps 10k A, AHB 16	AI0131 (+ Nut)	5
	- PAN, Alps 10k B, CC AHB 1	AI0051 (+ Nut)	5
	- STEREO HF, LF Alps 100k B CC x 2 AHB 12	AI0118 (+ Nut)	5
	- BALANCE Alps 10k B CC x 2 AHB 17	AI0117 (+ Nut)	5
Knobs	- Knob Body, TP110-006 Grey	AJ0058	10
	- Knob Cap - RED C111	AJ0063	10
	- GREY C111	AJ0064	10
	- GREEN C111	AJ0061	10
	- BLUE C111	AJ0066	10
VU Meter Complete, SQ10 Type		AD0011	2
VU Meter Lamp Complete, SQ10 Type		AD0013	10
* Jack Socket, 1/4" 3-pole, switched, metal bush		AL0369	5
Mute processor Battery, NICAD 3.6V, MP3		AP0019	1
Tools	Ring Spanner M6 (10mm AF)	AT0003	1
	Screw Driver No. 2	AT0002	1
	Screw Driver No. 1	AT0004	1

* P/Bay Jack Kit (Dual) AL AL0437

Description		Order Code	Qty
Switches	MUTE, PCB 2PC0, momentary	AL0374	5
	GENERAL, PCB 2PC0, latched	AL0162	5
	GENERAL, PCB 4PC0, latched	AL0333	5
	GENERAL, PCB 6PC0, latched	AL0354	5
LEDs	T1 Single RED	AE0086	5
	T1 Single YELLOW	AE0084	5
	Display, 10 Green	AE0257	1
	Display, 7 Red, 3 Green	AE0258	1
ICs	TL072P Dual Operational Amplifier	AE0046	10
	NE5532 Dual Operational Amplifier	AE0221	10
	4051B CMOS Gate	AE0118	5
	4052B CMOS Gate	AE0139	5
	4066B CMOS Gate	AE0116	5
	4071B CMOS Gate	AE0251	2
	4099B CMOS Gate	AE0238	2
	4518B CMOS Gate	AE0259	2
	LM3915 LED Driver	AE0136	2
	6N136 Opto isolator	AE0222	1
	LM339 Quad Comparator	AE0071	2
Resistor	22 ohm 1/4W 5%	AC0004	10
Transistors	ZTX109C NPN general purpose	AE0020	10
	BC214C PNP low noise	AE0031	10
	J111 FET	AE0083	5
	BC637 NPN	AE0068	5
	BC638 PNP	AE0037	5
	2N4403 PNP ultra low noise	AE0273	3
Diode	Zener, 5.6V 400 mW	AE0012	5
Fuses	20 x 5 mm AC 1.6A Anti-surge 220/240V	AL0466	5
	20 x 5 mm AC 6.3A Anti-surge	AL0395	5
	20 x 5 mm DC 0.5A Anti-surge	AL0297	5
	20 x 5 mm AC 8.0A Anti-surge	AL0487	5
User Option -	Jumper links	AL0334	5
Service Extender 50 way		ZX300 114	1

Additional Items (Not included with Standard Spares)

Complete tested PCB Assemblies

LED Bargraph master PCB	ZX100 079
LED Bargraph Display + Rectifier combination	ZX100 078 + ZX100 077
RPS4 regulator PCB ±16V 5A DC	ZX300 075
Mute processor PCB	ZX300 054

1.7 Specification

Electronic Performance
0dBu = 0.775 Vrms
0VU = +4dBu (1.23V) or -8dBu (300 mV)
Reference Frequency = 1kHz

Noise Performance
RMS Noise, 20kHz bandwidth, ref 0VU

Mic in, equivalent input noise (200 ohm source)	-127dBm
Group Out, 1 input open, unity gain, EQ IN/flat:	-86dB
Group Out, 24 inputs routed, faders closed:	-80dB
L-R Out, 1 input open, unity gain, EQ IN/flat:	-85dB
L-R Out, 24 inputs and 16 monitors routed, faders closed:	-82dB

Gain
Input to Group L-R or Mono outputs
Channel Mic In: 10dB (PAD IN) to +70dB
Line In: -4dB to +36dB
Tape In: -12dB to +28dB
Monitor Tape In: 0dB or 12dB (linkable)

Crosstalk

Referred to driven output	1kHz	10kHz
Muted, Input to L-R Out	-95dB	-80dB
On, Input to un-routed Group	-95dB	-80dB
L-R Separation	-68dB	-63dB

Frequency Response
Referred to 1kHz @ +4dBu, EQ Out

Mic In to Group Out, 40dB gain:	20Hz - 20kHz	+0/-1dB
Line/Tape In to L-R Out, 0dB gain:	20Hz - 20kHz	+0/-0.5dB

Outputs
Balanced L, R, Mono, Group 1-16
Outputs: max level +27dBu with balanced termination of 600 ohms or more. +21dBu unbalanced.
Unbalanced Direct, Aux and monitor outputs: max level +21dBu with load of 2K ohms or more, +18dBu with 600 ohm load.
Operating Level: 4dBu or -8dBu (linkable)

Metering
Standard meterbridge for all recording models includes 16 or 24 track meters plus L&R meters, optionally:
VU type: 18 or 26 illuminated analogue VU meters
BG type: 18 or 26 20-segment LED PPM bargraphs, -24 to +12dB
PA versions have metering incorporated in modules:
M326 Group: 20-segment LED Peak bargraph, -36 to +15dB
M355 Monitor: illuminated analogue VU meters

Distortion
THD + Noise @ +20dBu output level, typical

	Gain	1kHz	10kHz
Mic In to Group Out:	70dB	<0.01%	<0.01%
Line/Tape to L-R Out:	0dB	<0.007%	<0.007%

Equaliser
See module descriptions

Connections

XLR phase:	pin 2 +, pin 3 -, pin 1 ground.	
1/4" jack:	balanced	tip +, ring -, case ground.
	unbalanced	tip +, ring and case ground.
	stereo	tip left, ring right.
	insert	tip send, ring return.

All connections are in-phase, including group and L/R insert points.

SABER SERIES OVERALL DIMENSIONS

52 WAY CHASSIS

mm (inches)

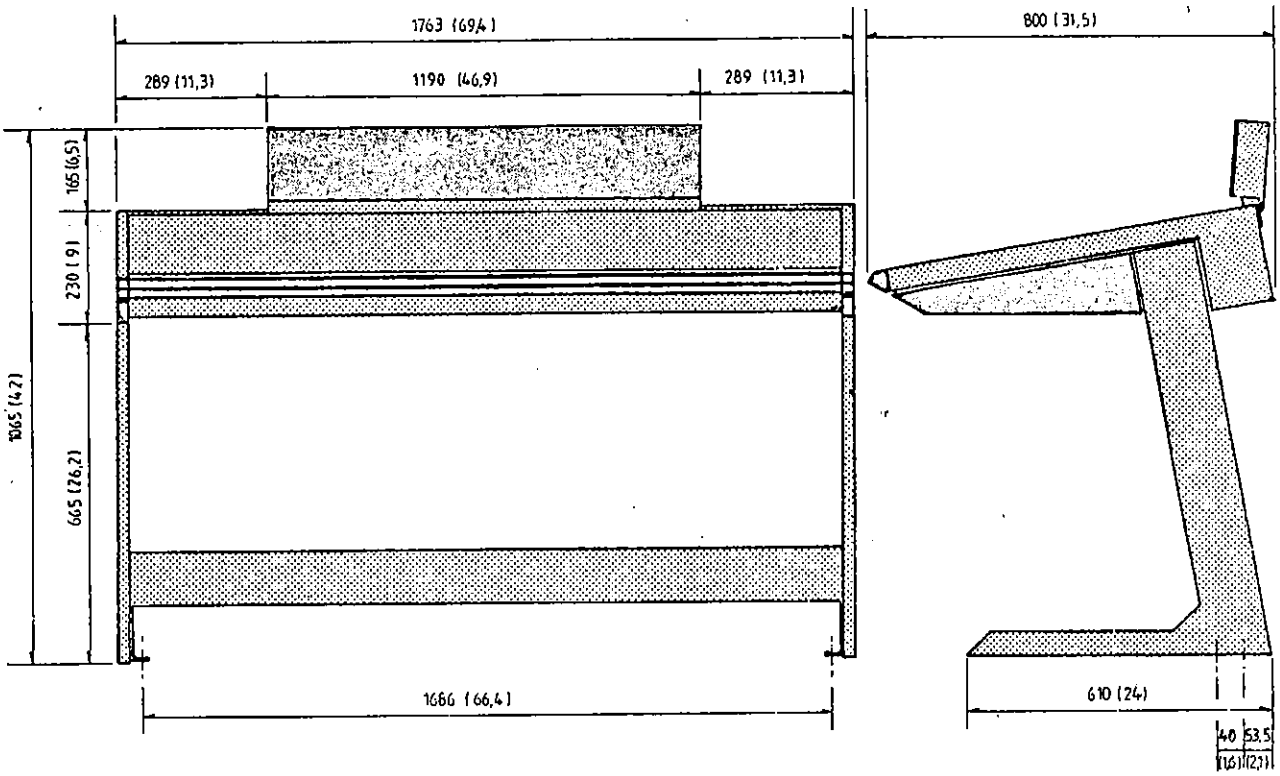

44 WAY CHASSIS

mm (inches)

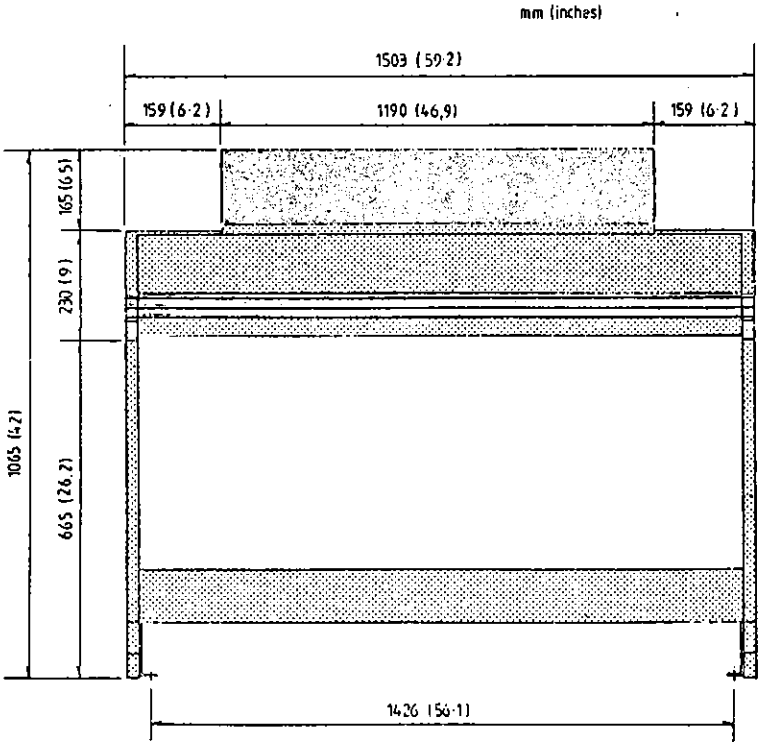

36 WAY CHASSIS

mm (inches)

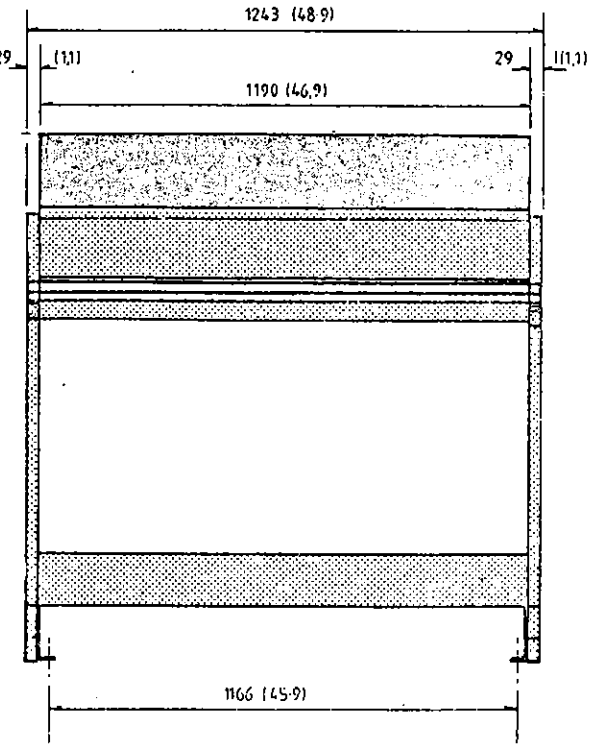

DIAGRAM SHOWING INTERNAL ARRANGEMENT AND FIXING POINTS.

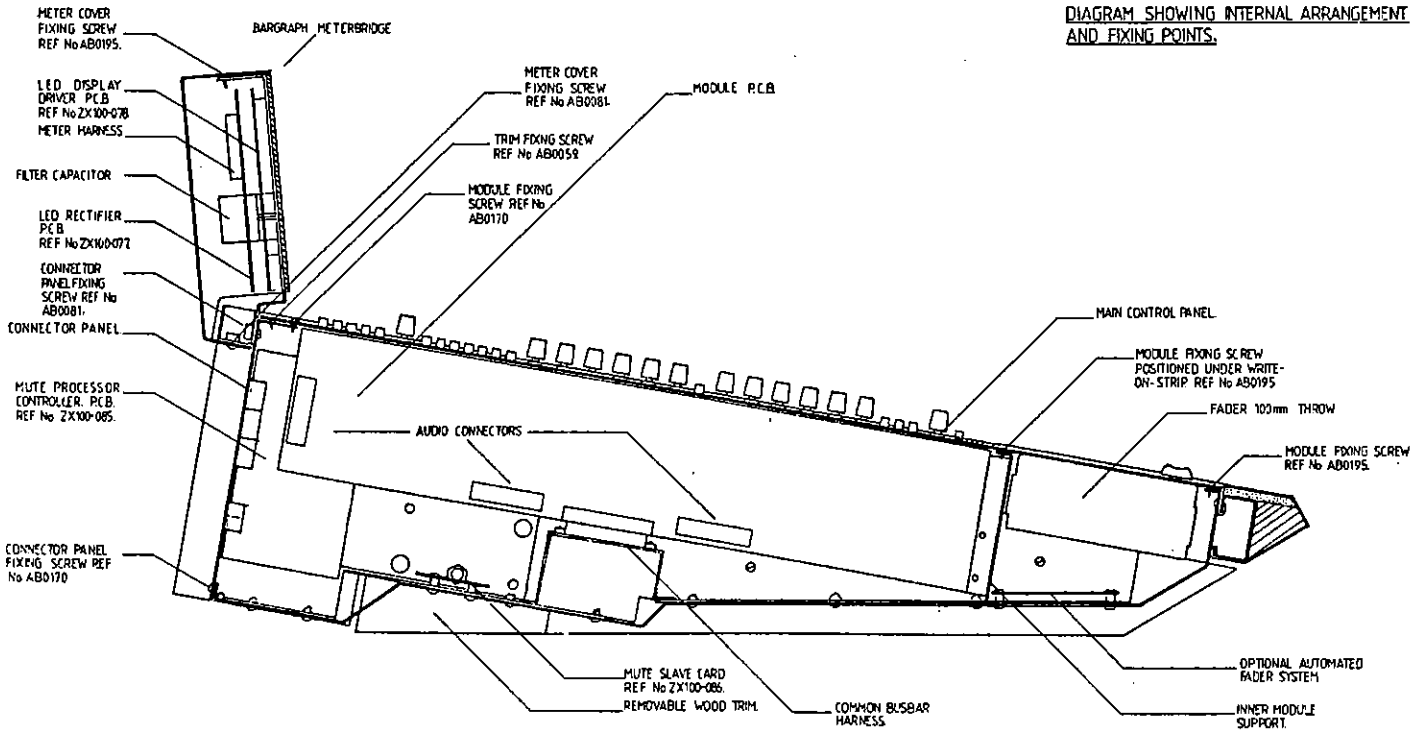

DRAWING NO. 693 ISS. 2

2.0 Module Exchange

Inputs

M310, M360 - all modules are identical except for the numbered mute buttons.

When ordering service exchange modules order module only (without mute button) and transfer the mute button from the faulty module to the replacement module. **When undertaking this work inspect the OPTIONS available for the module and make the exchange module agree with the faulty module prior to installation. This will avoid operation problems due to optional variations.**

Outputs

M325, M326, M330, M350, M355. Modules are unique in requiring the correct OUTPUT ASSIGNMENT to be set prior to installation in the console.

Service exchange modules will be shipped with no assignment or mute button.

When the module is used for service exchange it is necessary to set up the correct assignment. Refer to section "Module Assignment" and the illustrations for module options.

In the case of M350 and M355 complete modules the L,R and Aux 1-6 outputs are assigned prior to despatch.

In the case of M350 or M355 Left or Right PCB ASSEMBLIES these are NOT assigned prior to despatch.

It is necessary to undertake assignment when replacing a Left or Right pcb assembly. Refer to the component identification dwg AG0213 iss 2 BW356.

Metering

Exchange of any Output module including M350, but excluding M355, requires correct setting of the meter mode selector plug-on links. These are shownon the module pcb component overlays.

2.1Module Addition

1) Input Modules

This is permissible up to the maximum capacity of the frame. At present (October 1988) the maximum capacity of inputs is 40 modules of type M310 and/or M360.

This assumes there are also 8 output modules M320/M325/M326/M330 and one master module M350/M355 and a meterbridge.

The limitation on module capacity is two fold:

i) Power supply rating
ii) Internal DC cable rating

Allen & Heath accepts no responsibility for the consequences of attempts to increase module capacity beyond the limits of the standard main frame and power supply.

When adding input modules to a console it is necessary to make connections to the rear panel. There are two provisions.

i) Console supplied part filled, rear connector panel included for expansion. In this case it is only necessary to remove the module blanks and install the input modules with connections to the busbar and connector panel harness included with the console.

ii) Console supplied part filled, rear connector blank panel fitted. In this case addition of input modules also involves addition of a matching connector panel assembly. Telephone Allen & Heath for advice. The connector panel will be supplied complete and should be installed as follows:

a)remove the connector blank, release fixing screws internal and external.

b)fit connector panel. Replace fixing screws.

c)Connect 4 pin harnesses to main frame Mute Processor Slave pcb assemblies. Refer to illustrations 664 and MBD193.

The modules may now be installed and connected to the busbar harness and connector panel harnesses.

Input module M310 can be added in multiples of four. The blank module will usually be fitted in place of the highest number input modules.

Eg. Saber 32:16:16 MVU with only 24 inputs will have module positions 25 to 32 inclusive filled with two four way blank panels. Unless specified at time of order connections for modules 25 to 32 will be included for expansion at a later date.

Input module M360 can be added in multiples of four. Connector panel M306 accepts connections for four modules and is accompanied by connector panel M307 which accepts connections for four standard M310 modules.

There is no wiring in the fader bay of STANDARD consoles which would limit module addition. However should fader automation be fitted this may affect later alterations.

PATCHBAY consoles are supplied prewired at all 32 input module positions. When a part filled patchbay console is supplied it will include connections for the modules omitted. These may be added at a later date by simple connection of the module to the prewired harnesses.

2) Output Modules

Standard 16x16 models already include the maximum number of output modules for the system. The 8x8 M325 PA module system, and the 8x16 M320 recording module system, and the 8x8 M326 PA module system can be expanded.

M325 expansion: within the limitations of the largest frame (52) size it is permissible to substitute group output modules for an equivalent number of input modules. This exploits the existence of output mix buses 9 to 16 which are unused in the standard PA console. Such a variation is only possible if specified at the time of order so that internal harnesses from TAPE INPUT circuits are correctly connected between M301 and M304 panels.

M320 expansion: again within the limitation of the largest frame (52) size it is permissible to substitute group output modules for an equivalent number of input modules. This exploits the existence of output mix buses 9 to 16 which are unused in the standard 8:16 format console. The result would be a format 32:16:32. There is not (October 1988) a meterbridge giving 32 track meters however.

On consoles having less than 8 output modules of any type, eg. 4 x M330 giving 8:8 format then the standard connector panel for 8 modules is supplied plus a four way module blank. Addition of the remaining modules may take place using the prewired connections to the busbars and connector panel. It would be necessary to order the additional modules pre-assigned to the correct output numbers and order the corresponding mute buttons for group monitor mutes.

All meterbridges are prewired and connected to the output connector panels for operation of 16 "track" meters and the L,R monitor pair. Refer also to section 2.3 for details of module assignment.

M330 expansion: no additional outputs are available however additional monitors 17 to 32 can be provided by fitting 8 additional M330 modules and a connector panel, which will carry the numbers 1-16 repeated.

These monitors can be operated permanently in "fader reverse" mode. There would be no group output from the module. If specified at the time of order then Tape Inputs 17-32 can be prewired in parallel with M310 Tape Inputs as per Tape Inputs 1-16 on the standard console. This additional work is chargeable.

M335 expansion: Each M335 provides two signal paths for TAPE input and LINE input to the stereo mix. There are no group outputs. The two faders are permenantly in the monitor input paths to the stereo mix.

Four M335 modules with connector panel M308 when added to eight M330 creates monitors for 24 track operation.

M326 expansion: Within the limits of the largest frame size a total of sixteen output modules may be fitted.
Types M326 and M325 may be mixed.
Each would be assigned to one of the sixteen group mix busses.

Note that the internal eight-way matrix ribbon harness does not permit expansion of the matrix system, there are only eight mix busses available. In an expanded system the total number of matrix outputs remains fixed at eight.

The eight M325 modules would not contribute to, or receive from M326 matrix modules.

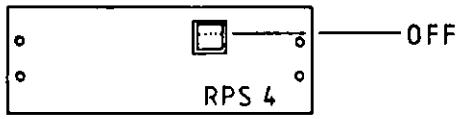

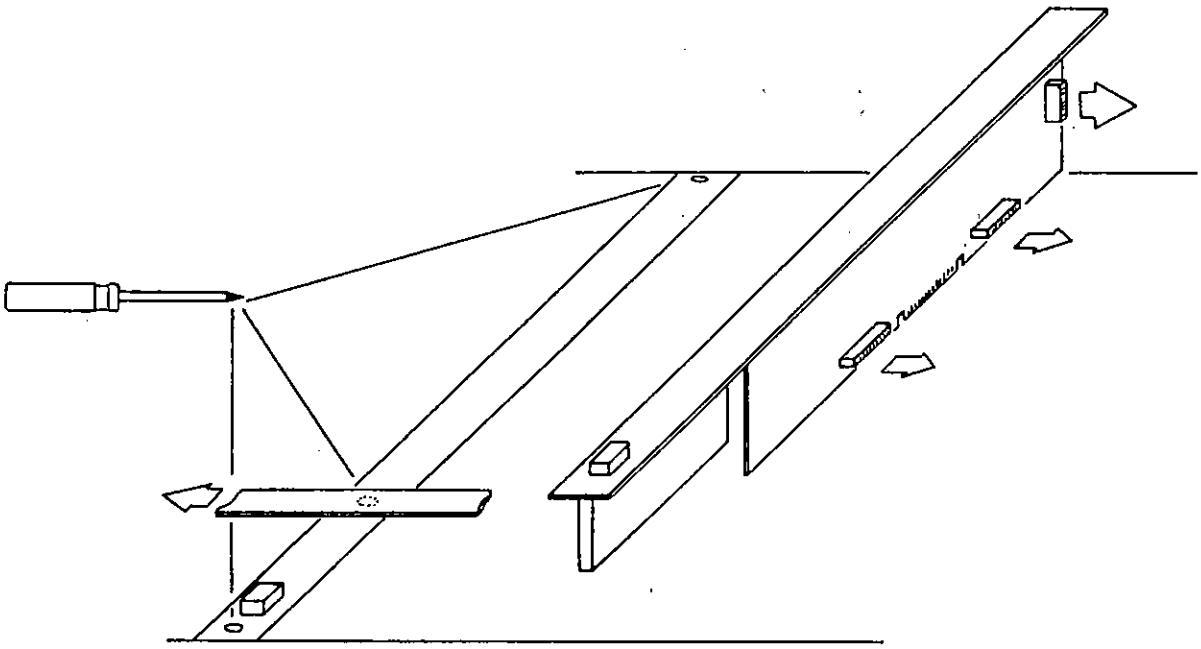

MODULE REMOVAL AND REPLACEMENT
SERIAL NO. M32001 ONWARDS

MODULE REPLACEMENT

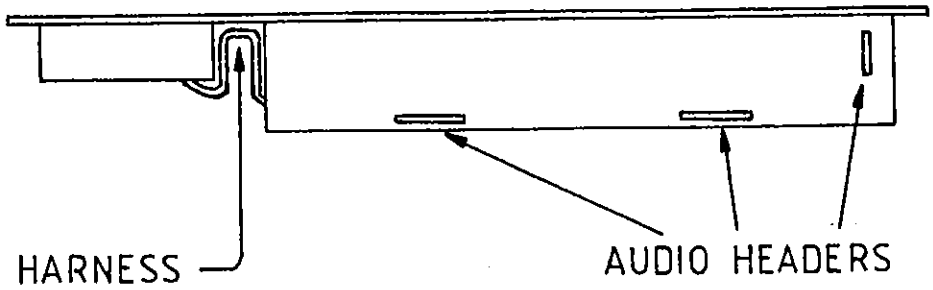

WHEN REPLACING MODULE
ENSURE THAT HARNESS IS NOT TRAPPED AGAINST MIXER FRAME AT THIS POINT.

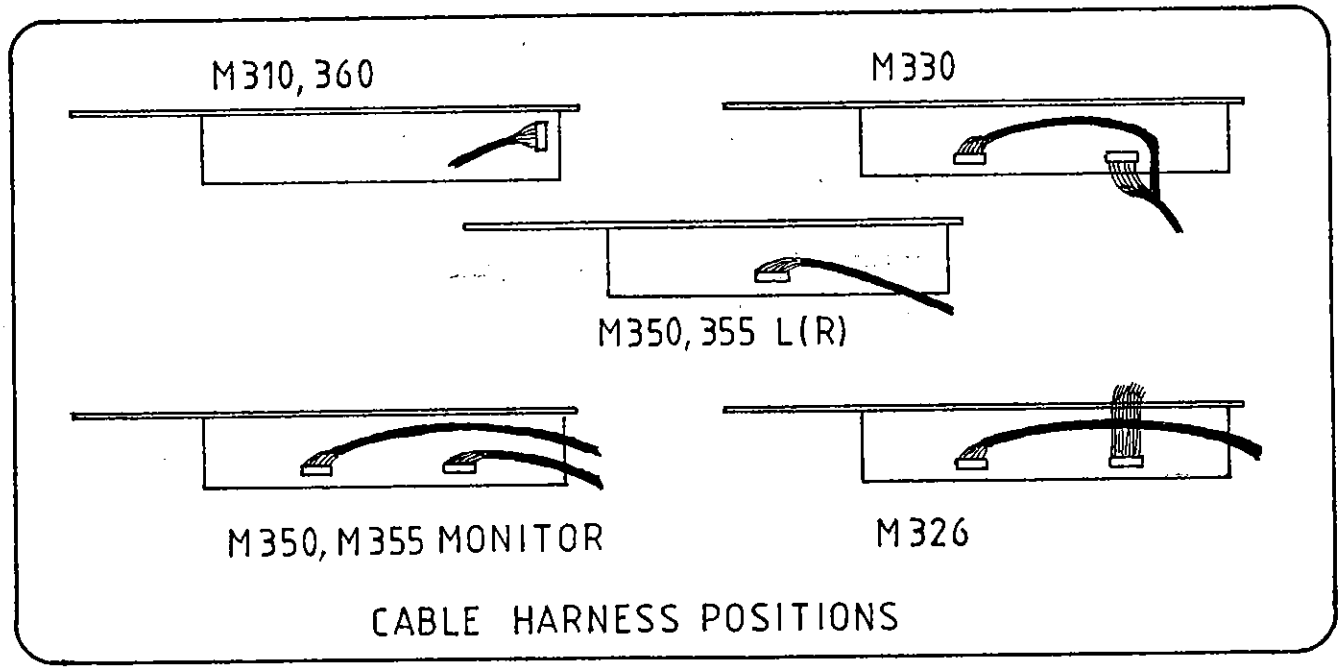

CABLE HARNESS POSITIONS

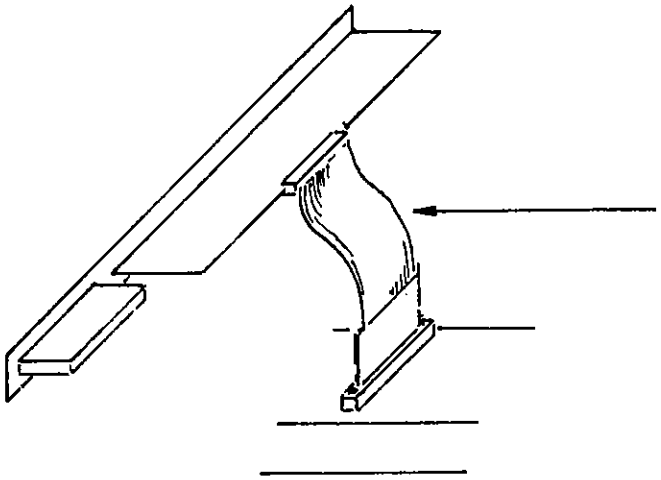

MODULE SERVICE EXTENDER

STOCK NUMBER AL0454

2.2 MODULE REMOVAL AND REPLACEMENT

Module Identity

Input Modules have no identity. They will take up the position related to their location in the frame. They may be replaced or interchanged without affecting their function.

Group Modules have a unique identity signified by their module numbers. IE. wherever group 3/4 may be placed in the frame, it will always by group 3/4. Therefore they cannot be interchanged or replaced without care. Groups may be internally connected to match a different module position, but this requires changing a soldered link on the PCB. Refer to module assignment.

Metering Group modules from VU and Bar Graph consoles are not interchangable without altering pluggable jumpers on the PCB. Interchange of these modules will result in mis-operation of the metering system.

Module Preset Trimmers

M320/M325/M326/M330/M350 modules contain factory preset trimmers for meter calibration and output balance adjustment. Do not alter these without suitable test equipment and without reference to the Section 3 ADJUSTMENTS.

Removal

1) Switch off the console power supply.

2) Slide the write-on strip out of the left or right-hand sides of the console

3) Remove the module retaining screws. Most modules have three fixing screws. The patchbay has 12 fixing screws and the M350 module six fixing screws. Do not forget to remove the central screws beneath the write-on strip.

4) Lift the module carefully upward. To change the links described in section 2.3, it is not necessary to remove the wiring harnesses. If the module must be removed completely from the frame, unplug the wiring harnesses from the various connectors. Carefully note the orientation of the harness connectors to facilitate replacement.

5) Remove the module completely from the frame.

Replacement

1) Perform the above steps in reverse order.

2) Carefully dress the harness into position as the module is settled into the frame - **DO NOT FORCE.**

3) Replace ALL screws, problems may result from operation with the module improperly fixed into the frame.

Mute Button Removal and Replacement

The numbered mute buttons are a snap-fit on the switch shaft. They may be removed, following module removal from the frame, by applying pressure from beneath to push the button off the shaft. A replacement button is simply pushed on from above and snaps into place.

Module Fault Finding

It is permissible to fault find a module while it is connected to the frame wiring and powered up.

Take precautions to avoid accidental short circuits to the exposed connections

2.3 CUSTOMER OPTIONS

The following pages show the location and details of options for these functions:

Auxiliary send pre/post selection
Output high/low level selection
Group assignment
Monitor input high/low level selection
Automute local/distant selection
Stereo input fader start/stop options
Matrix system pre/post fader options

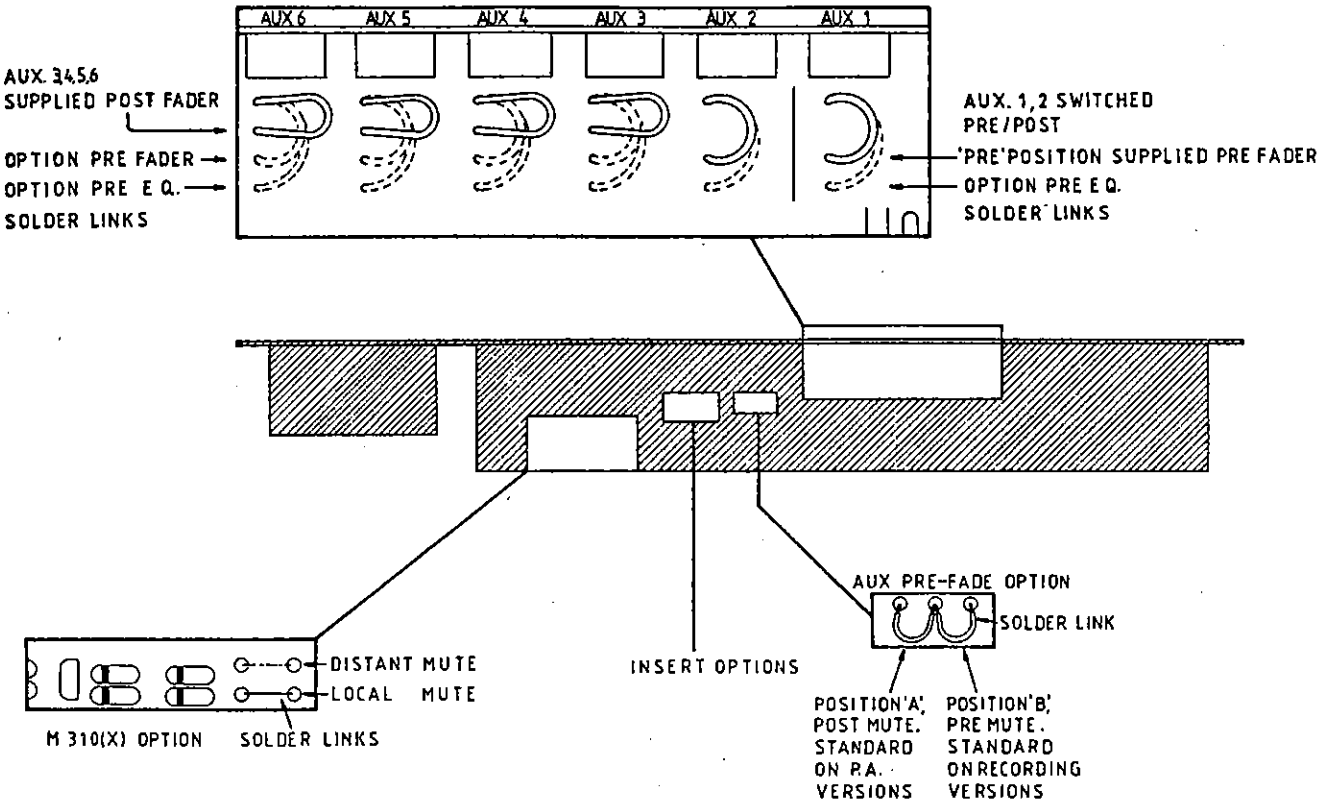

M310 MODULE PCB. AG 0210

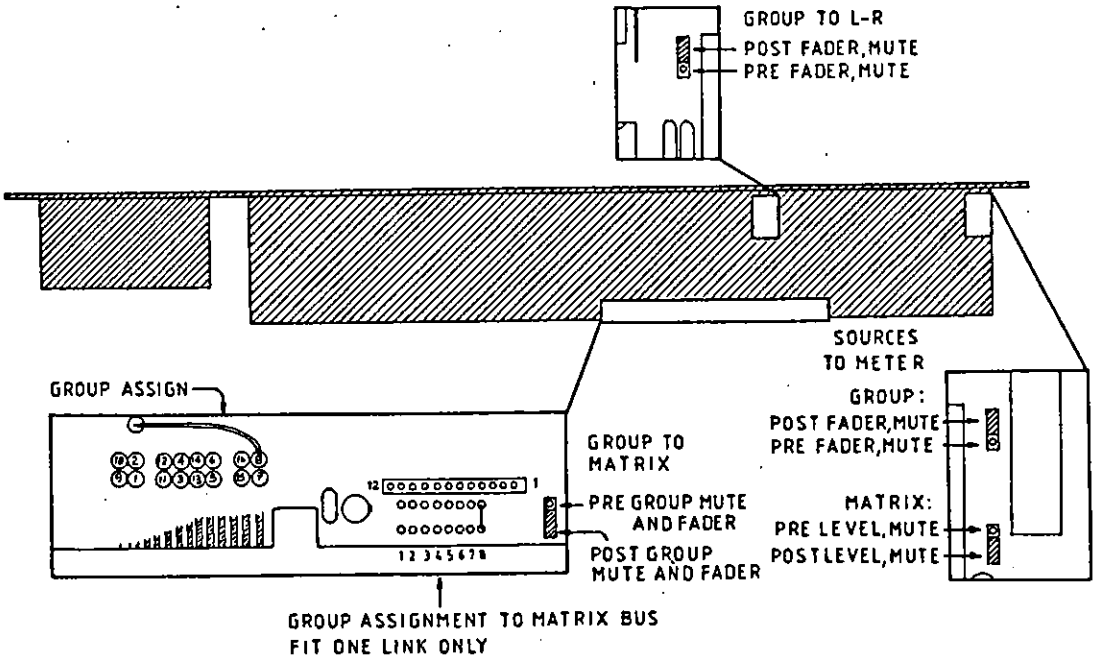

2.3.2

M326 MATRIX GROUP PCB. AG 0216

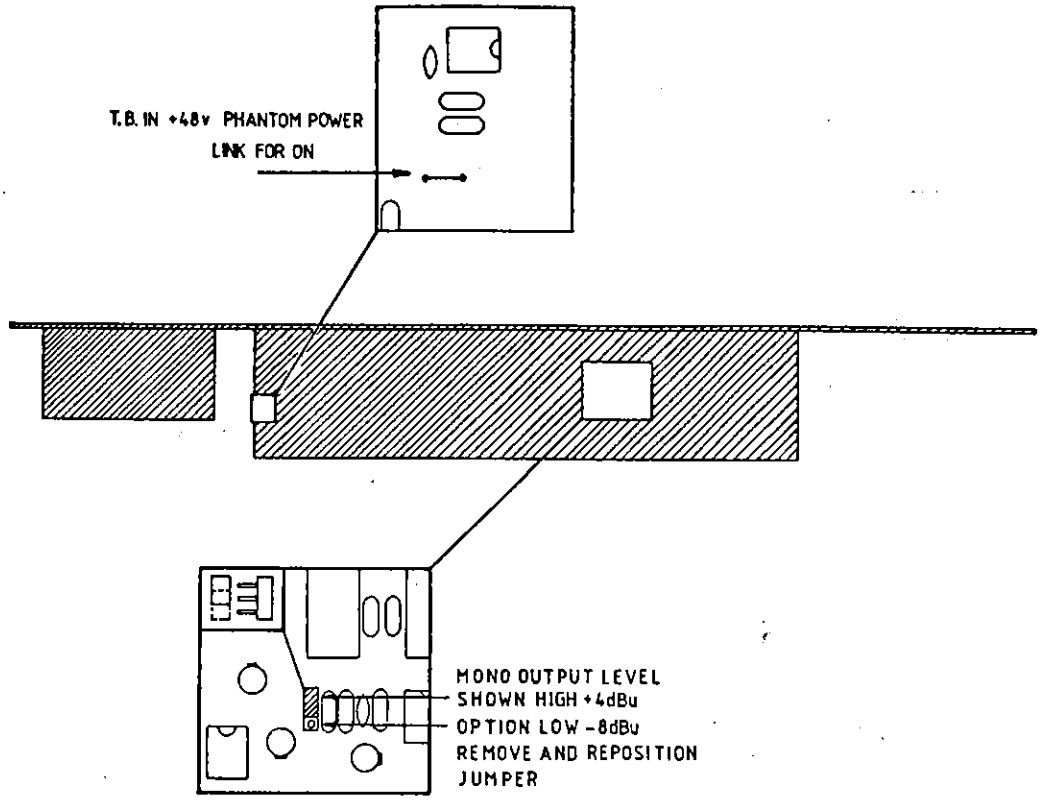

M355 MODULE (MONITOR) PCB. AG 0215

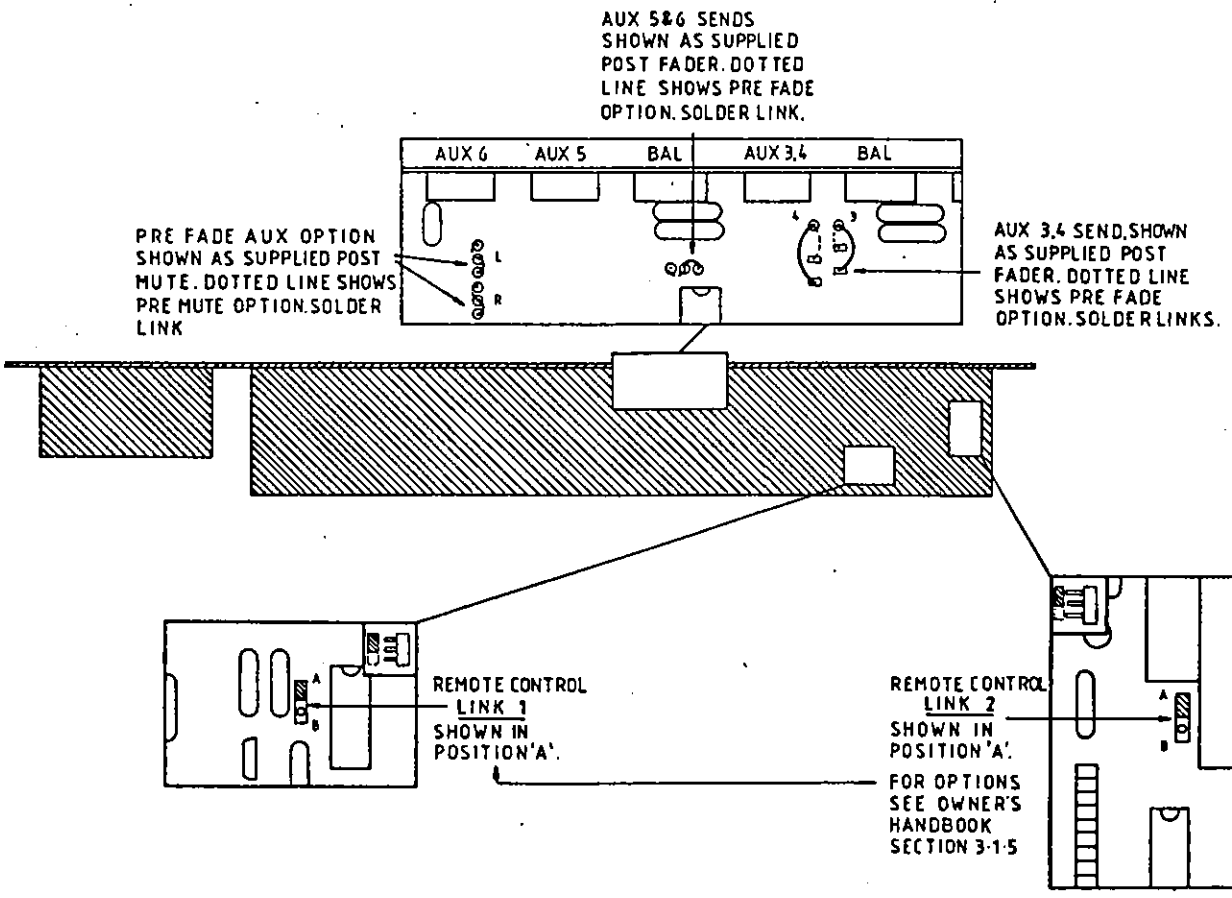

M360 MODULE PCB. AG0211

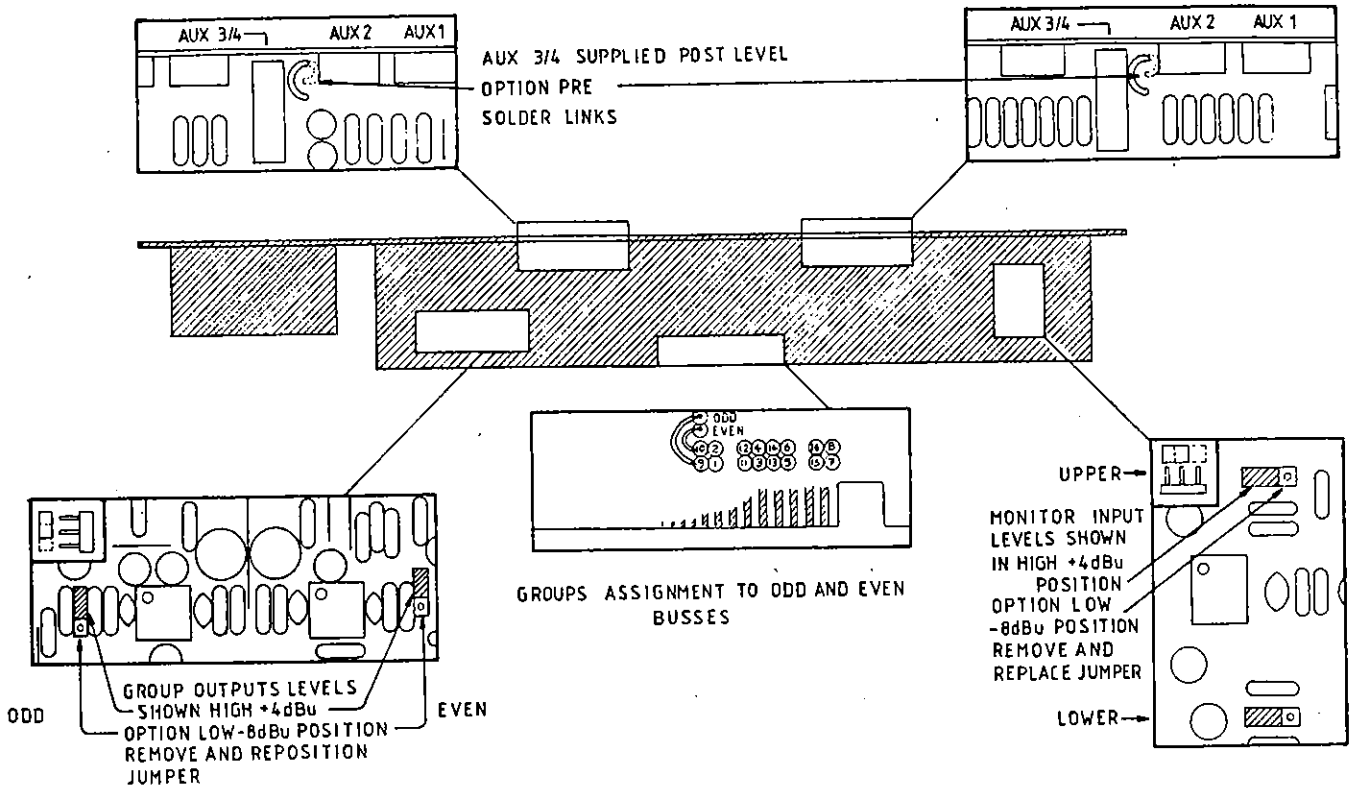

M330 MODULE PCB AG 0212
M335 MODULE (NO GROUP LEVELS OR ASSIGNMENT)
M325 MODULE (ONLY 8 GROUPS)

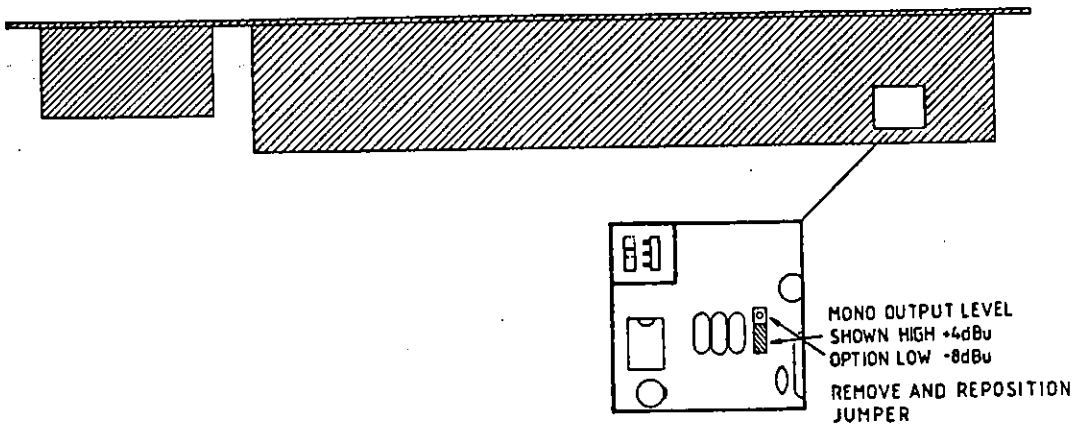

M350 MODULE (MONITOR) PCB. AG 0214

3.0 ADJUSTMENTS

1. M310(X) modules Optional functions have already been described. There are no other adjustments relevant to this module.

2. M325 modules)
   M326 modules) Optional functions have already been described.
   M330 modules)
   M335 modules)

3. **METER CALIBRATION**

   Group outputs (also multitrack meters)

   Module types M325 M326 M330 M335

   Adjustment to reference level calibration may be necessary for the following reasons:

   replacement of meter assembly VU or LED type
   replacement of module assembly
   repair of module assembly meter drive circuit

   Modules and meters are calibrated in the factory in sets, each module is adjusted for the individual meter installed at the time of manufacture. Nominal calibration is 0 Vu and 0dB = +4dBu (1.23v RMS) or -8dBu (300mV, -10dBV).

   LED Bargraph Meters

   LED Bargraph Meters supplied with Bargraph meterbridge consoles derive their calibration from the LED MASTER PCB ASSEMBLY which is part of the meterbridge. A faulty item will introduce apparent faults or calibration errors on all LED meters. Replacement of the LED MASTER PCB ASSEMBLY should be followed by re-calibration of all meter circuits. Refer also to the CIRCUIT DESCRIPTION for METERS.

   Procedure: Recording and M325 PA Consoles

   Turn on the console oscillator and select 1kHz. Connect a 1/4" jack to XLR cable into OSC output (M302 panel). With PA consoles use an external signal generator in place of the console oscillator.

   On each module (M325, M330 or M335) select TAPE monitor source. Plug the oscillator into TAPE input XLR socket for channel 1. Adjust the oscillator for output level +4dBu (1.23VRMS) or -8dBu (300mV RMS also -10dBV) if the console has been set out for low level tape machine operation.

Inspect meter 1. A reading of OVU +/- 0.5dB is correct. If the reading falls outside this limit adjustment is necessary, see below. LED meters will indicate 0dB = first red LED ON with the test input. If the RED LED is out or the second one on, then adjustment is needed. Check by selecting 100Hz and 10kHz frequencies that the meter indication is constant with frequency.

Release the module from the console, power down to avoid accidental electrical short circuit while handling the module. Follow instructions shown earlier. Power up, with the module pcb accessible and all connections in place.

Locate the meter calibration adjusters. These are horizontal carbon trimmers located on the module PCB in the area illustrated below. Use a preset trim to adjust the meter for correct indication.

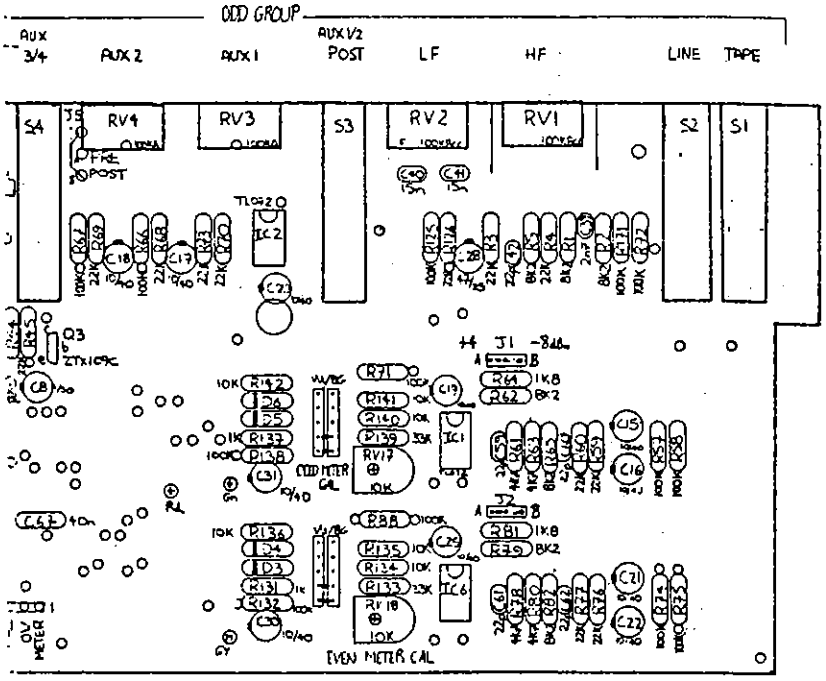

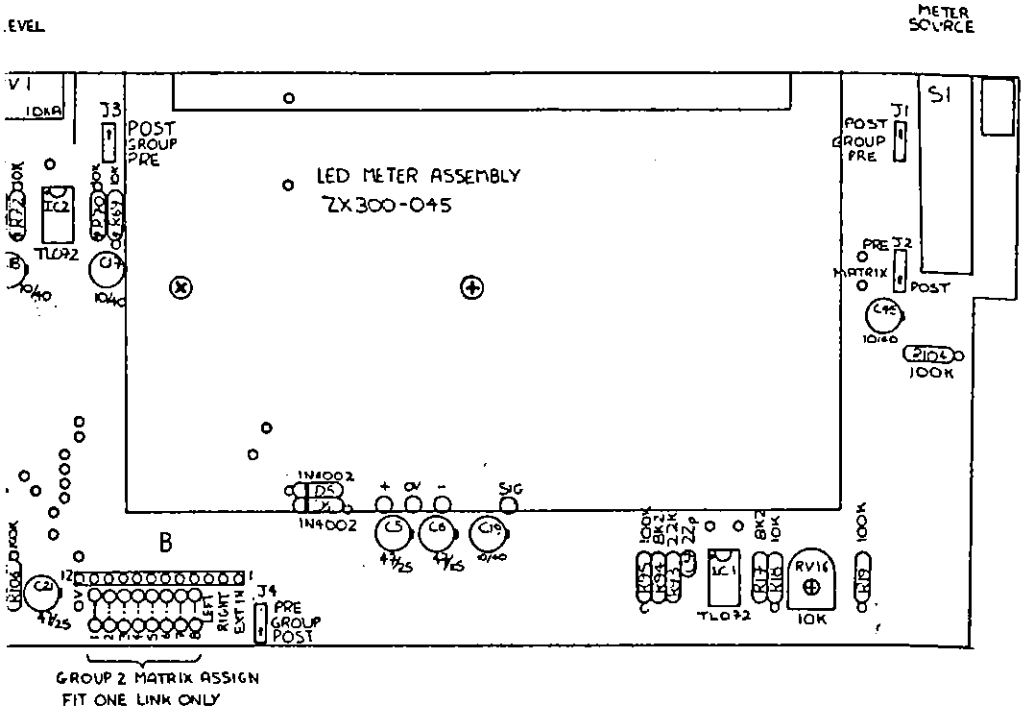

While the module is out re-connect the oscillator to TAPE INPUT XLR channel 2 and check meter 2. If necessary adjust the corresponding module PCB trimmer.

When M325 modules are in use there is only one LED meter per module.

Procedure: M326 PA Matrix System; Connect the oscillator to a channel input and route to an output. Use a test meter to verify +4dBu signal level at output, and calibrate the module meter.

Repeat the test for all group modules and meters.

Alternative calibration

Bargraph meters may be recalibrated within the range of the adjusting trimmer. This range is approximately: +6dBu to 0dBu for 0dB indication

Vu meters may be recalibrated within the range +12dBu to -2dBu for 0VU indication.

These figures apply when the +4dBu operating level is selected. When 300mv operating level is selected the figures are lowered by 12dB.

L-R Monitor

The central L - R monitor meters are adjusted using the same general proceedure with the following variations.

Recording Consoles:	Connect the oscillator to jack inputs PBI L and R on the M302 panel. Select source TAPE 1 and inject +4dBu. Module PCB trimmers are located on the M350 Monitor PCB.
PA Consoles:	Connect the oscillator to jacks inputs EXT L and R on the M305 panel. Select source EXT and inject +4dBu. Module PCB trimmers are located on the M355 monitor PCB.

VU or LED metering

Module internal preselector. The illustration shows the location of the meter-type preselector for module types M320, M330, M350. Modules M325 and M326 are always supplied set for the LED meter integral with the module, no alteration is required. Module M355 is always supplied set for use with the integral L and R VU meters.

Modules M330, M335; when interchanging modules for service purposes examine the preselector position on the original console module. Reset the preselector on the exchange module to match. THe preselector has two positions: in the VU position the output to the meterbridge is rectified audio via the calibration trimmer. In the LED position the output to the meterbridge is buffered (but not rectified) audio via the calibration trimmer. Correct calibration is obtained when the calibration trimmer is loaded with the 10K ohm input impedance of the LED meter input amplifier.

Module M350 operates the same way as M330 and M335, the same preselector for VU or LED meters is required if module exchange is undertaken. The preselectors are located on the M350 monitor pcb as illustrated.

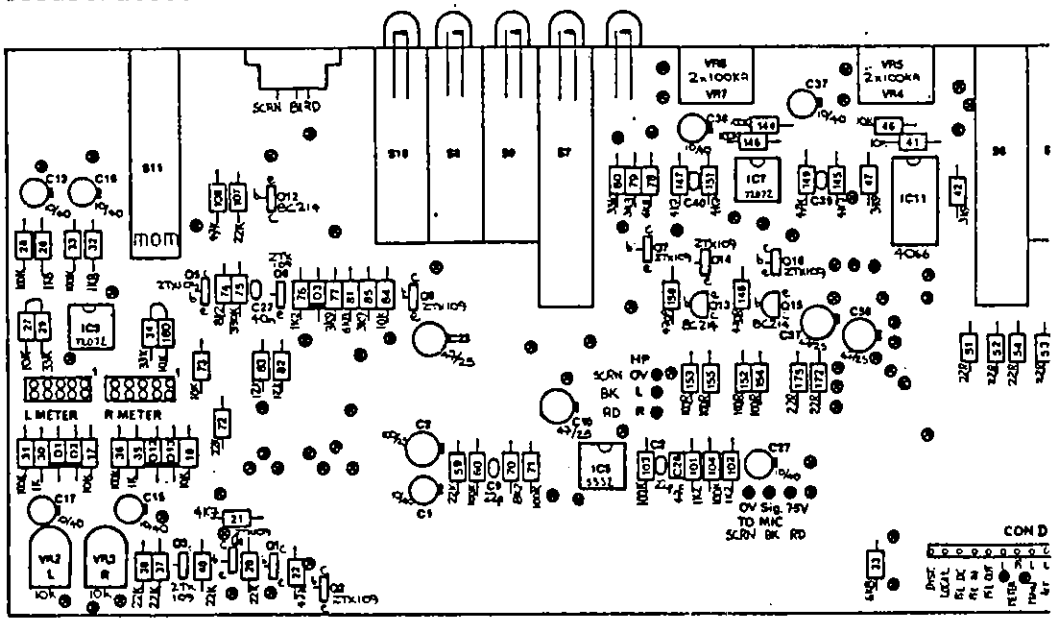

FOR VU - INSERT LINKS 1.2+3
FOR BG - INSERT LINKS 4+5

3.2 Output Symmetry

Applicable to electronic balanced outputs which on SABER are:

GROUP OUTPUTS 1-16, "on-board" amplifier components in M325, M326, M330
LEFT OUTPUT, " " " " in M350, M355
RIGHT OUTPUT, " " " " in M350, M355
MONO OUTPUT, " " " " in M350, M355

During normal service adjustment should not be necessary.

To verify correct operation measure the amplitude of pin 2 and pin 3 with respect to pin 1 (chassis) of the XLR outputs. Make the measurement with 1kHz sine wave signal of approximately OVU amplitude using an oscilloscope or precision AC volt meter. The signal present on pin 2 is the "in-phase" component. The signal on pin 3 should be of identical amplitude and opposite phase (180°). If the amplitude is too large or small adjust the internal variable preset shown on the component identification drawing "SYMMETRY" and obtain equal amplitudes. These measurements should be made "off-load", disconnect external equipment from the output in question.

Note

Balanced outputs are active ground compensating types. For correct operation into unbalanced loads then pin 2 or pin 3 must be connected to pin 1.

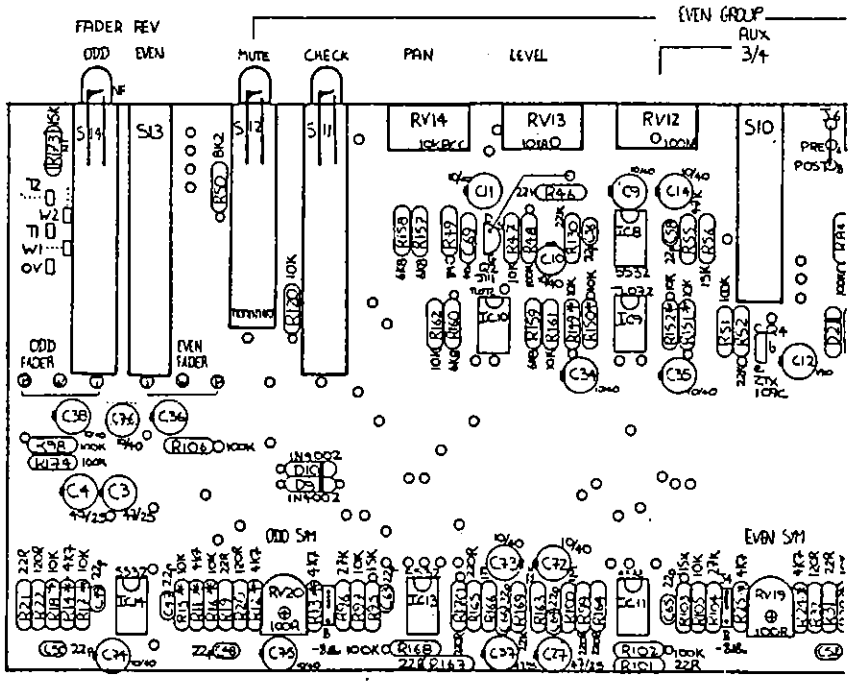

ALLEN + HEATH SABER DUAL GROUP PCB M330 MODULE PCB AGC
DRAWING N. BW 359-30
DRAWN BY I MCB 11-10-89

3.3 Module Assignment

Module types M325, M326, M330, M350, M355

These modules provide outputs from the internal mix buses. Each output is created by a unique connection between the console common busbars (the busbar harness) and an amplifier input on a pcb assembly within a module.

Output Name	Module Type	Connection Type
Groups 1-8	M325	Solder joint selection
Groups 1-8	M326	Solder joint selection
Matrix 1-8	M326	Solder joint selection
Groups 1-16	M330	Two solder joint selections
Left	M350 left pcb	Solder joint selection
Left	M355 left pcb	Solder joint selection
Right	M350 right pcb	Solder joint selection
Right	M355 right pcb	Solder joint selection
Aux 1,3,5	M350 & M355 left pcb	Solder joint selection
Aux 2,4,6	M350 & M355 right pcb	Solder joint selection

Service exchange of any of these module types must include inspection and confirmation of correct assignment.

Refer to the module option illustrations for the location of the selections.

Note: APPARENT FAULT CONDITION: two console outputs having extremely high level output noise and low signal level. This is the result when two modules have been given the same bus assignment, eg. there are two module assigned to group bus 3. Both outputs will be noisy, 6dB low in level and sound quality will be degraded. Upon removal of one module (either one) output 3 magically cleans up.

REMEDY: Find the other module that is incorrectly assigned.

Refer also to the section:- module exchange and addition.

4.1 Outline Technical Description

1. Saber audio systems are manuafactured using industry standard linear op-amp, logic gate and discrete semiconductor designs. There are no electro mechanical relay contacts in the audio signal path.

2. The console has a universal DC supply system for all amplifiers and logic and indicator subsystems. The external power supply type RPS4 operates from single phase 50/60Hz AC input and provides the three regulated DC outputs required for console operation: +16v, -16v, +48v DC. Indicator and logic systems use several combinations of ±16v DC supplies. The computor system uses the +16 v DC supply.

3. Audio amplifiers are supplied with ±16v DC and all are centre biased types having negligable offset voltage at input and output terminals. This offset voltage is typically less than ±1v with respect to chassis (0v DC).

4. Within the M350 (and M355 PA) monitor master module audio is switched by 4066 CMOS gates between op-amp stages. These gates and the associated op-amps are biased from a ±7.5 DC supply which is generated locally on the PCB.

5. All pots, faders and switches are isolated from the residual DC offset by coupling capacitors. Appearance of loud clicks and crackles during control operation is a fault symptom. Note however that the input preamp design includes switch contacts which are followed immediately by high gain amplification. Operation of input Tape, Line and phase reverse switches introduces a slight switch click which is not a fault.

6. Audio inputs are a mixture of balanced (differential) and unbalanced types. Line input impedances are high, greater than 5k ohms.

7. Audio outputs are a mixture of balanced (active electronic type) and unbalanced types. Output impedances are low, to drive loads down to 600 ohm total (balanced outputs) or 2k ohms (unbalanced outputs).

8. All audio inputs and outputs are phase coherent.

9. Module assemblies are tested for performance prior to final test of complete consoles.

10. Routine adjustments are not necessary to maintain operation.

4.2 Check System

There are subsections to this system as follows:

i) Check System "PFL"

Bus 9	DC control from "PFL" pushbuttons (M350 and M355 only)to PFL detector circuit.	
Buses 7 and 5	respectively ENABLE and DC buses for M310 channel modules.	
Buses 8 and 6	respectively ENABLE and DC buses for M320, M325 and M330 modules.	
Check Mode Switch, S7, master console mode selector. (S5 for P.A.)		
PFL detector circuit	M350 pcb AG0214 M355 pcb AG0215	Q5, Q6, Q7 Q5, Q6
PFL audio summing amp	M350 pcb AG0214 M355 pcb AG0215	IC5 pins 5,6,7 IC4 pins
Bus 11	audio mix bus for channel and monitor CHECK switch outputs. Connects to PFL summing amp via PFL/SOLO mode switch.	
Bus 12	audio mix bus for Aux 1-6 and Return 1-4 PFL switch outputs. Connects permanently to PFL summing amp input.	
PFL interrupt logic	M350 pcb AG0214 IC10 (IC3) 4066 CMOS gates Configured as changeover switches in the audio path. Either IC4 (IC2) or IC5 (IC4) outputs connected to meter driver circuits and monitor output circuits. (In brackets IC numbers for M355 monitor pcb).	
TB IN	M350 system only:- uses PFL summing amp and switching to inject an external audio source over the monitor loudspeaker circuits.	
COMMS 1 and 2	M355 system only:- same as TB IN in principle.	

The two modes of the PFL system are as follows:

Normal; PFL OFF:	All check and PFL pushbutton volts are released. Buses 9, 7, 8 self bias to zero volts DC, Q6 is turned on, control point A holds IC10 gates 1/2 and 11/10 on, low resistance. Control point B holds IC10 gates 4/3 and 8/9 off, high resistance. PFL LED is off.
PFL ON:	One check pushbutton selected. Buses 9, 7, 8 pulled low, Q6 is turned off, control points A and B toggle and PFL LED is turned on. IC10 gates 1/2 and 11/10 go high resistance. IC10 gates 4/3 and 8/9 go low resistance. IC5 output is connected to the meter drivers IC3 and monitor level control VR4.

Note: Changing mode from PFL to SOLO will inhibit CHECK PFL. However PFL from Aux 1-6 and RET 1-4 remains active.

ii) Check System Solo

The subsections of the SOLO system are as follows:

Buses 7 and 5 respectively enable and DC buses for M310 channel modules.
Buses 8 and 6 respectively enable and DC buses for M320, M325 and M330 modules.

Check mode switch S7 (S5)	master console mode selector. In the following description assumed to be in SOLO position (pressed):
Enable switch S9 (S4)	for M310 channels. When selected connects bus 7 and Q8 emitter and also illuminates the LED "chan".
Enable switch S10 (S2)	for M320, M325 and M330 modules. Operates as S9 for bus 8 and LED "mon".
Q8 and R84,85 C23 (Q11 and R92,93 C33)	form a current source for the enable buses.
Link switch S8 (S3)	when selected connects together DC buses 6 and 5. LED "link" is turned on.

Check switches on modules, when selected connect together buses 7 and 5 (M310) or 8 and 6 (M320, M325, M330).

Transistor switches on modules M310 (Q8) M320, M325, M330 (Q3 and Q4) which are connected to the DC buses via the check switch. The transistor controls the module audio mute FET.

The three modes of the check solo system are as follows:

Normal, SOLO NOT enabled	operation of a check switch connects DC and enable buses together and isolates that module from the DC bus. Enable buses are biased to the negative supply and the voltage on the DC bus does not change, module transistors therefore remain biased off and no muting occurs.
Normal, SOLO enabled	the enabled bus is biased negative by Q11 to approximately -11v.
Enable, SOLO	operation of a check switch connects DC and enable buses together and isolateds that module from the DC bus. The enabled bus bias current pulls the DC bus up to approximately -12.5v and module transistor switches are turned on. Audio mutes occur on all modules NOT solo.

4.3 Audio Mute Element

This is a common circuit element used extensively throughout Saber modules and other Allen & Heath products. The design has three important qualities:

i) the audio switch is a special design of electronic solid state switch that employs a field effect transistor (FET), this component has practically infinite operating life and requires negligible power.

ii) the operation of the switch is by a DC control voltage which may originate locally within the module or from a remote location such as a computer memory.

iii) operation of the switch introduces negligible degradation to the audio signal. In particular noise, control feedthrough (click), harmonic distortion and shut off are all excellent.

The switch comprises the following sub sections:

1. An input amplifier; this op amp provides a defined impedance and level for the FET drain-source channel.

2. An FET; this n-channel junction FET is chosen for large ratio of "on-to-off" resistance, low "on" resistance, optimum pinch off voltage and low control feed through.

3. An output amplifier; this op-amp is configured so that the FET drain-source channel is at the summing mode where no voltage exists, this achieves many of the high quality performance characteristics required.

4. A DC control system; the gate of the FET must be biased negative with respect to the drain-source in order to pinch off the drain-source and mute the audio path.

   The FET gate is connected by the control transistor to the console negative DC supply (audio off) or allowed to float (audio on). The transistor also provides increased flexibility in the DC control input arrangements.

   The DC control system includes a method of "latching" the panel switch output to create a persistent on or off status. In the Saber application panel switches are momentary action type, the output pulse of which is converted into a steady state by the central mute processor system acting via the slave bus system.

   Service Note Failure of the FET (J111) is un-common. When necessary to replace it then be sure to replace the coil of wire that surrounds the FET pins. Failure to do this will cause degradation of shut off performance.

4.5 LED Metering

Recording Bargraph (BG) console metering
Sets of pcb assemblies in the meterbridge provide the following functions:

Pcb Type	Function	Circuit Ref
LED master (one off)	reference scale generation, scan clock generation, address code generation, address & scale multiplex output.	MBD 189iss5
LED rectifier	audio rectification to DC, rise and fall time constant, comparison of scale with rectified audio.	MBD 189iss5
LED display	Scale demultiplex, LED display drivers.	MBD 189iss5

This pcb set receives DC supply from the console RPS4 unit via dedicated cables in the DC harness. There is no connection within the console frame and modules between audio and LED meter DC supplies. This is deliberate to avoid supply induced crosstalk and noise.

Logic ICs and LEDs draw current from the negative DC supply and zero volts.

Op-amps (TL072) and comparators (LM339) draw current from both positive and negative DC supplies.

The reference scale for the meters is created on the MASTER PCB with reference to zener diode ZD1. This scale is multiplexed with a 3 bit address code and transmitted to all rectifier and display pcb sets. The transmission rate of the scanned addresses is approximately 1000Hz. Each rectifier and display pcb set carries four channels of meter display. Each channel has its own audio rectifier and time constant components. The four outputs of the rectifier pcb pass to the display pcb and are compared with the reference scale received from the master pcb. The LED display for each channel is turned on for all LEDs "lower" than the instantaneous audio amplitude. LEDs "higher" in amplitude remain off. An equivalent current passes through transistor ZTX109 on the display pcb instead of through the LED. Refer to circuit diagrams MBD 189 issue 5.

Alternative calibration levels

Alternative calibration:	1kHz sinewave		
Vu versions:	0Vu =	-2dBu +12dBu	minimum maximum
Bargraph versions:	0dB =	0dBu +6dBu	minimum maximum

4.6 Mute Processor System:

Refer to the schematics and frame wiring diagram.

DC for the mute processor is obtained from the console +ve supply via +5v DC regulator. DC for the controller and slave pcbs is distributed on the data harness.

MUTE PROCESSOR CENTRAL COMPUTER (MPC). This is part of the SABER master connector panel assembly M302 or M305. Data is received from MIDI IN and from console module MUTE pushbuttons. The MPC is also in two way communication with the MCC control surface, part of the M350 or M355 module panel. MPC transmits data to MIDI OUT and to console module mute amplifiers. An 8 way common bus, plus extra address connections, carries address and data information from the MPC to SLAVE pcb assemblies in the frame. Each pcb has capacity to interface with 8 audio mute pushbuttons. Each has two connections; TX which is the module pushbutton logic output to the MPC, and RX which is the logic voltage from MPC to the module mute amplifier. The SLAVE pcb latches the mute status data from the MPC.

The MPC runs a program which has the following functions:

WRITE data received from MIDI IN into the working memory (console real time mute status memory)

SCAN console mute pushbuttons and MCC panel for mute or de-mute events and RECALL events

WRITE the result of each SCAN cycle into the working memory

WRITE the working memory out to module mute amplifiers

WRITE the working memory to MIDI OUT with RECALL event PATCH number

WRITE the working memory to MIDI OUT in AUTO UPDATE code format

MUTE PROCESSOR SLAVE PCB. Each pcb connects to the mute processor computer card MPC via a common bus and a unique address wire X. It also connects to each audio channel one wire connects the module switch (TX) and the second connects to the audio mute amplifier (RX). Refer to component ident BW226 and circuit diagram A164 iss2.

Operation of slave pcb:

MUTE IN 1-8 receive logic low signals from console mute switches, these are step signals from non locking switch type.

MUTE OUT 1-8 are latched open collector outputs to console audio mute amplifiers. Logic high = audio mute.

IC1 is the latch for open collector outputs 1-8. Data to operate the latches (DO) arrive on pin 3. Address A0 A1 A2 is shared with IC2 the multiplexer for mute switch signals to the computer.

IC2 scans eight mute switches and sends data down pin 8 DI.

During power up IC2 is inhibited and "all mutes clear" data is sent to all channels via IC1.

During operation a mute switch step is detected by the computer as it scans DI. This data is written into the MP working memory and output via MIDI according to the MP mode and protocol in force. At the same time the switch status data is sent out over DO with the appropriate address code and IC1 latch is toggled to the new switch status. Refer also to 5.5 Mute Processor fault diagnosis.

4.7 Power Supply RPS4

Specification:

Input: AC 50/60 Hz single phase. Selected by switch either 110, 120, 220, 240v AC nominal.

Outputs: DC, smoothed, regulated, short circuit and overvoltage protected.

General purpose output:	±16v DC ±0.5v with any load between zero and 5A DC per rail.
Ripple and noise:	less than 50 microvolts RMS on load measured between supply and common with 20kHz bandwidth. (Typically less than 5mV peak to peak measured on an oscilloscope)
Phantom power output:	+48v DC ±2.5v with any load between zero and 200mA DC.
Ripple and noise:	same as general purpose output.

Notes:

1. Should current supplied by the DC outputs exceed the specification then ripple and noise will increase, eventually to a dramatic extent, and the output voltage will fall. In this event the console audio outputs will contain excessive hum components. This situation can arise accidentally if the actual AC input voltage is below the nominal voltage selected. This may be corrected by reselecting the appropriate nominal AC input voltage.

2. The RPS4 is designed for convection cooling without fan assistance. Adequate unrestricted airflow is necessary. Do not "sandwich" the RPS4 in between two rack units. Do not leave it on the floor without also providing an air flow path to the underside vents.

3. Measurements of the DC voltages and ripple figures given may be made, for example, at the console DC INPUT connector by removing the cover. Alternatively release one module from the frame and measure on the module itself.

   CAUTION: take care to avoid accidental short circuits during measurement.

   Allowance should be made for resistance in the DC cables to the console. A voltage drop of approximately 0.25v is normal. The actual voltage reading inside the console will be in the range of 15.0v ±0.5v depending on the actual point of measurement.

4. Refer also to the Technical Bulletin 10 which compares RPS3 with RPS4.

5. Assembly and circuit details are shown on diagram 733.

4.8 24 Track Formats

Saber consoles have been manufactured in 24 track versions in "first generation" (M3 1000 - 199) and "second generation" (M32000 onwards) versions.

Hardware

The assembly details for 24 track versions are different to the standard 16 track versions in some details which are described below:

Item	16 Track	24 Track
Input module	M310	M310
Output module 1-16	M320 or M330	M330, 8 off
Monitor module for tracks 17-24	--	M335, 4 off
Master module	M350	M350
Mute Processor	Same	Same
Meterbridge	16 track BG or VU	24 track BG or VU
Power supply (M31000-199)	RPS3	RPS3B or RPS4
(M32000-)	RPS4	RPS4
Connector panels, Input	M301 for M310	M301 for M310
Outputs 1-16	M304 for M320 M303 for M330	M303 for M330
Outputs 17-24	--	M308 for M335
and Monitors 17-24	--	M308 for M335

Note that the following components

M335 dual monitor module
M308 connector panel
24 track meterbridge

are unique to 24 track versions of Saber.

System Description

A typical 24 track console has the additional four M335 modules situated to the right of the eight M330 regular output modules.

Four input modules are omitted to give space for this facility.
Inputs can access outputs 1-16 in the usual way.
Outputs 1-8 are duplicated, by parallel wiring, between output XLRS 1-8 and the M308 connector panel output XLRS. This is for connection to track inputs 17-24.
Thus an input routed to output 1 is reaching track 1 **and track 17**
Control of output level during recording on tracks 17-24 is made by adjustments of output faders 1-8.
The faders on the four M335 modules provide input only for either Tape or Line source.

Channel Tape Inputs 1-24 are internally parallel connected to monitors 1-16 on the M330 modules and monitors 17-24 on the M335 modules.

Meters 1-16 are driven by the eight M330 output modules.
Meters 17-24 are driven by the four M335 dual monitor modules and show only Tape Inputs 17-24.

5.0 Basic console fault finding. Saber, all versions

The console normal operation can be confirmed by these quick and simple tests.

1. Power supply panel indicators for the three DC supplies (±16v, +48v) should be illuminated.

2. VU meters should be illuminated or Bargraph meters operational (use 1kHz oscillator and slate L/R).

3. On any module select pushbutton CHECK or PFL. The adjacent LED should light.

These three tests prove that DC power is being generated, is reaching the console and the modules.

If these tests cannot be passed then there may be major DC malfunction which must be repaired before atttempting repair to individual sections.

Examples of possible faults:

		REASON/CHECK
1.	Power supply indicators OFF	AC power off Power supply fuse blown Power supply component fault Short circuit on DC outputs
2.	Meters not illuminated	Power supply OFF Meter DC connector not fitted properly All lamps faulty!
3.	Module LEDs not working	Internal module edge connector missing Power supply fault Module component fault
4.	No Mute Processor display (2 digit LED display)	Internal connection to MP keyboard pcb missing Keyboard pcb component fault Central mute processor fault
5.	Module mute buttons do not respond	Mute Processor in "local off" mode and external MIDI equipment not echoeing back MIDI to the console. Central mute processor fault
	One module only, mute buttons do not respond	4 pin connector from module to MP slave pcb missing/faulty. Module pcb component fault.

It is not difficult to overlook replacement of a connector after service repair.

The tests above 1 to 5 should be made at the end of any repair work in order to check that all is well.

Service Procedure

When installed in a typical system the Saber console is a major component. A report of a console fault should always be treated seriously however, it is necessary to complete diagnosis of the fault and identify the location within the system. Only when tests have been made to eliminate faults in equipment connected to the console and in the connection cables is it appropriate to attempt repair of the console.

Use Substitution of known good circuits to aid identification of the faulty circuit.

In order of frequency of occurence faults on installed systems can be ranked as follows:

1. External interconnections; cable termination breakdown or connection error.
2. Internal interconnections; wiring termination problem.
3. Electromechanical defect; pot switch or fader broken or worn.
4. Electronic component defect; IC transistor, capacitor, resistor defective.

Faults may be of a permanent or intermittent nature. Reports of intermittent faults demand provocation by thermal cycling, mechanical vibration and flexure as an aid to location.

5.1 DC Distribution

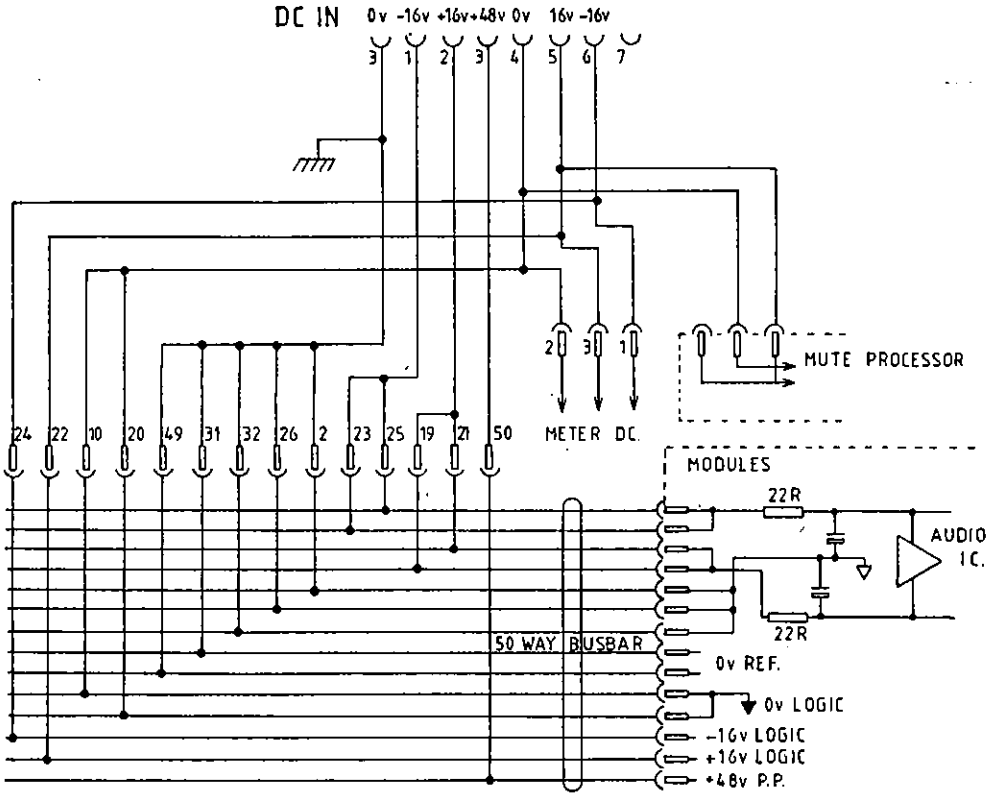

Notes: METER DC and MUTE PROCESSOR DC internal connections draw DC power from pins 4, 5 and 6 of the external DC connecting cable.

All other circuits of the console draw DC power via pins 1, 2, 3 and 8.

Pins 3 and 4 are separate grounds.

CMOS Logic components within the M350/355 modules are supplied with +/- 7.5 DC which is regulated from the main DC supplies.

5.2 Smoke, Fuses and Sparks or what happens when there is a short circuit somewhere

The purpose of this note is to provide useful information. The failure modes described are not unique to Allen & Heath products and may be encountered on many types of electronic equipment.

Every pcb assembly has series resistors between the local components and the main DC busbar connectors. In the event of a local short circuit these resistors pass excessive current and reach high temperature very quickly accompanied by smoke and the smell of burning paint! Usually the resistor burns out and disconnects the DC power, however while this taking place the DC voltage may be pulled low temporarily and the console malfunction. The causes of this phenomenon are:

a) spontaneous random semiconductor IC failure, the IC also burns out and ceases to function.

b) IC placed on the pcb 180° rotated causing reverse DC connections.

c) Accidental short circuit +DC to ground, +DC to -DC or -DC to ground, caused by repair tool, broken wire or foreign matter,

The series resistors are 22 ohm 1/4 watt and should be replaced by an identical component.

Fuses:

The power supply includes fuse protection as follows:

AC panel fuse:	protection against short to earth and secondary failure.
AC pcb fuses:	protection against rectifier failure and regulator failure.

The power supply output is protected against damage from short circuit by internal current-limit protection. Under short circuit load conditions the output voltage falls to a small value.

Short Circuit Protection

The regulator circuit includes limitation of short circuit current to approximately 5.5A DC. The output voltage under short circuit conditions will be adjusted by the regulator to give this current. Continuous operation into a short circuit is likely to cause failure of the appropriate low voltage AC fuse.

Test for a short circuit in either the DC cable or console by disconnecting.

Over Voltage Protection

The regulator circuit includes thyristor crow-bar shunts for each 5A supply. These are triggered when the regulated DC output rises above the nominal rating for any reason. This is usually followed by failure of the appropriate low voltage AC fuse.

Service Note

It is important to protect the console from DC supply voltages in excess of the nominal values.
When an AC supply fuse (high or low voltage) has failed switch off the supply and disconnect the console before attempting service repair to the power supply. Catastrophic damage to the console IC population will occur in the event of excess DC voltages reaching the console.

Disconnect the power supply from the console.

In the event of a thyristor crow-bar having been triggered by a regulator fault it will be necessary to temporarily remove the thyristor component (or lift one end of the zener diode) in order to allow measurement of DC conditions.

Following service repair to the power supply it is important to verify by DC voltage measurements that the correct nominal output voltages are present off-load **before re-connecting the power supply to the console.**

Accidental damage, where the +48v output is connected to other part of the PSU assembly, may cause damage to power supply components since the voltage ratings of some components will be exceeded.

5.3 Audio and DC Measurements

1. DC Conditions, typical audio op-amp

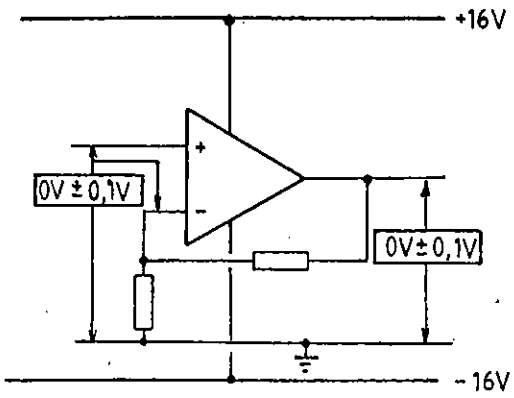

2. Audio signal measurements; typical audio op-amp, 1kHz sine wave.

Non inverting

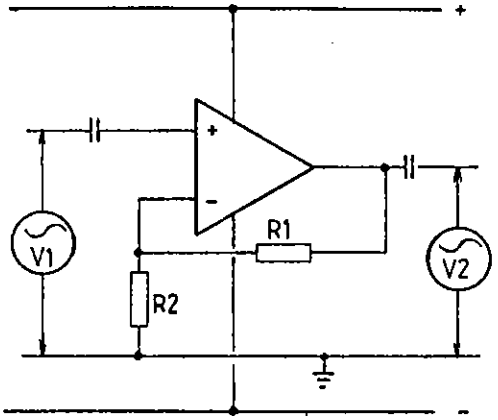

$$GAIN = \frac{V2}{V1} = 1 + \frac{R1}{R2}$$

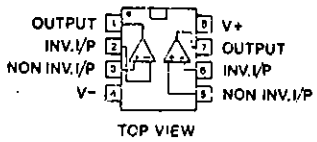

Inverting

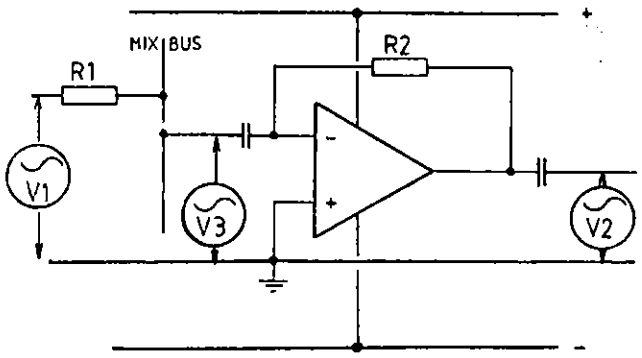

$$GAIN = \frac{V2}{V1} = \frac{R2}{R1}$$

$$V3 \simeq \frac{V2}{10{,}000}$$

$$\text{VOLTAGE GAIN dB} = 20\log\frac{V2}{V1}$$

5.4 LED Meter

Fault Diagnosis:

Symptom	Possible Cause
All 18 meters show same fault	DC supply fault. Wrong type of meter selected on ALL output modules
Every fourth meter shows same fault, eg. 3,7,R,11,15	Master pcb connection fault Master pcb component fault
One meter faulty	Audio connection fault from output module to rectifier pcb. Wrong type of meter selected on output module. Rectifier pcb component fault. Display pcb component fault. Connection fault between rectifier and display pcbs.
Four meters faulty (1-4, 13-16, etc)	DC connection fault to rectifier/display pcb set. Busbar harness fault. Connection fault between rectifier and display pcbs.
One meter fails to indicate higher than a certain level	LED open circuit.
Response time of LED column too fast or too slow	Rectifier pcb component fault.
Mechanical assembly:	After replacing on LED pcb assembly check the visual aligment of the LEDs with the acrylic window. Obtain full scale meter indication and ensure the top and bottom LEDs are not obscurred and that the LED column is central in the window. Perfect aligment may require slackening and adjustment of the positions of the LED rectifier and display pcbs.

5.5 Mute Processor Fault Diagnosis

Step 1: Confirm operation of console MIDI IN.
Select MP mode LOCAL "ON" using the SHIFT page.
Remove any connection to SABER MIDI "IN".
Test any mute switch for correct operation.
If the result is OK proceed with step 2.
If the result is no mute LED and audio switching then an internal console fault may have occured. Refer to section xxx.

Step 2: Use the SHIFT page to turn LOCAL "OFF".
Repeat the test of any mute switch.
There should be no result, the audio and LED are "frozen" or locked in the position set before the LOCAL was switched off.
Connect SABER MIDI "OUT" to MIDI "IN".
Repeat the test of mute switches. Normal operation is expected.
If mute switches remain locked then an internal console fault may have occured. Failure of the MIDI IN opto coupler IC is more likely to occur than failure of the MIDI OUT gate IC.
Test the MIDI IN opto coupler by measuring forward and reverse bias resistance of the opto coupler LED.

Test MIDI OUT by connecting pin 4 to pin 5.
Connect an oscilloscope to display the signal on the two pins 4 and 5 with respect to 0v (pin 2).
MIDI data is logic square wave pulse trains with peap to peak amplitude approx 2v and a switching rate of approx 30kHz.

Battery back up of the memory contents relies upon the on-board Ni-Cad cell. This is recharged while the console is powered. Failure of the cell would result in loss of memory contents following power down. On power up the memory contents would be random.

Service replacement of the cell requires removal of the Mute Processor computer pcb from the M302 (PA M305) rear connector panel.

6.0 Schematics and circuit diagrams

Title		Dwg No	Iss No
Allen & Heath Component reference diagram			
RPS4 PCB component identification		BW229	2
Power Supply RPS4 connections and circuit diagram		733	2
Master rear connector panel wiring	M302 (for M350)	739	2
Master rear connector panel wiring	M305 (for M355)	740	2
Rear connector panel wiring	M301/7 (for M310)	738	1
	M306 (for M360)	738	1
	M303 (for M330)	738	1
	M308 (for M335)	738	1
Rear connector panel wiring	M304 (for M325)	741	2
	M300 (for M326)	741	2
Main console buss allocation		743	1
Saber meterbridge wiring diagram		665	1
LED rectifier PCB component identification		BW223	1
LED display PCB component identification		BW223	1
LED master PCB component identification		BW223	1
LED meter circuit diagram		MBD189	5
Mute processor computer PCB component identification		BW224	1
Mute processor computer PCB circuit diagram		MBD190	3
Mute processor keyboard PCB component identification		BW225	1
Mute processor keyboard PCB circuit diagram		698	1
Mute processor slave PCB component identification		BW226	1
Mute processor slave PCB circuit diagram		A164	2
Mute processor wiring		663	1
Mute processor wiring (V4 software)		663	2
Input module M310.1 (X) component identification		BW353	2
Input module M310.1 (X) circuit diagram		723	3
Input module M310 (X) component identification		BW353	1
Input module M310 (X) circuit diagram		723	2
Input module M360 (pre EQ insert) component identification		BW368	2
Input module M360 (pre EQ insert) circuit diagram		730	2
Input module M360 component identification		BW368	1
Input module M360 circuit diagram		730	1
M360 RIAA module component identification		MBD111	1
M360 RIAA module circuit diagram		MBD111	1
Output module M320 component identification		See M330 Ident.	
Output module M320 circuit diagram		726	1
Output module M325 component identification		See M330 Ident.	
Output module M325 circuit diagram		728	1
Output module M325/6 meter identification		BW327	1
Output module M325/6 meter circuit diagram		666	1
Output module M326 component identification		BW371	1
Output module M326 circuit diagram		729	1
Output module M330 component identification		BW359-30	1
Output module M330 circuit diagram		725	1
Output module M335 component identification		BW359-35	1
Output module M335 circuit diagram		727	1

Title	Dwg No	Iss No
Monitor master module M350 L/R component identification	BW356	1
Monitor master module M350 L/R circuit diagram	724	1
Monitor master module M350 monitor component identification	BW362	1
Monitor master module M350 monitor circuit diagram	731	1
Monitor master module M355 L/R refer to M350		
Monitor master module M355 monitor component reference	BW365	1
Monitor master module M355 monitor circuit diagram	732	1
16 track patchbay M390:		
Assembly diagram	702	1
PCB Assembly drawing	703	1
PCB circuit position 1 & 2	681	1
PCB circuit position 3	682	2
PCB circuit position 4	684	1
PCB circuit position 5 to 16	683	1
24 track patchbay M391 PCB positions 1 to 4:		
PCB Assembly drawing	BW375	3
PCB circuits, see M390		
24 track patchbay M391 PCB positions 5 to 16:		
PCB Assembly drawing	BW378	1
PCB circuits positions 5 to 8	D035	1
PCB circuits positions 9 to 16	D036	1

Allen&Heath Component References

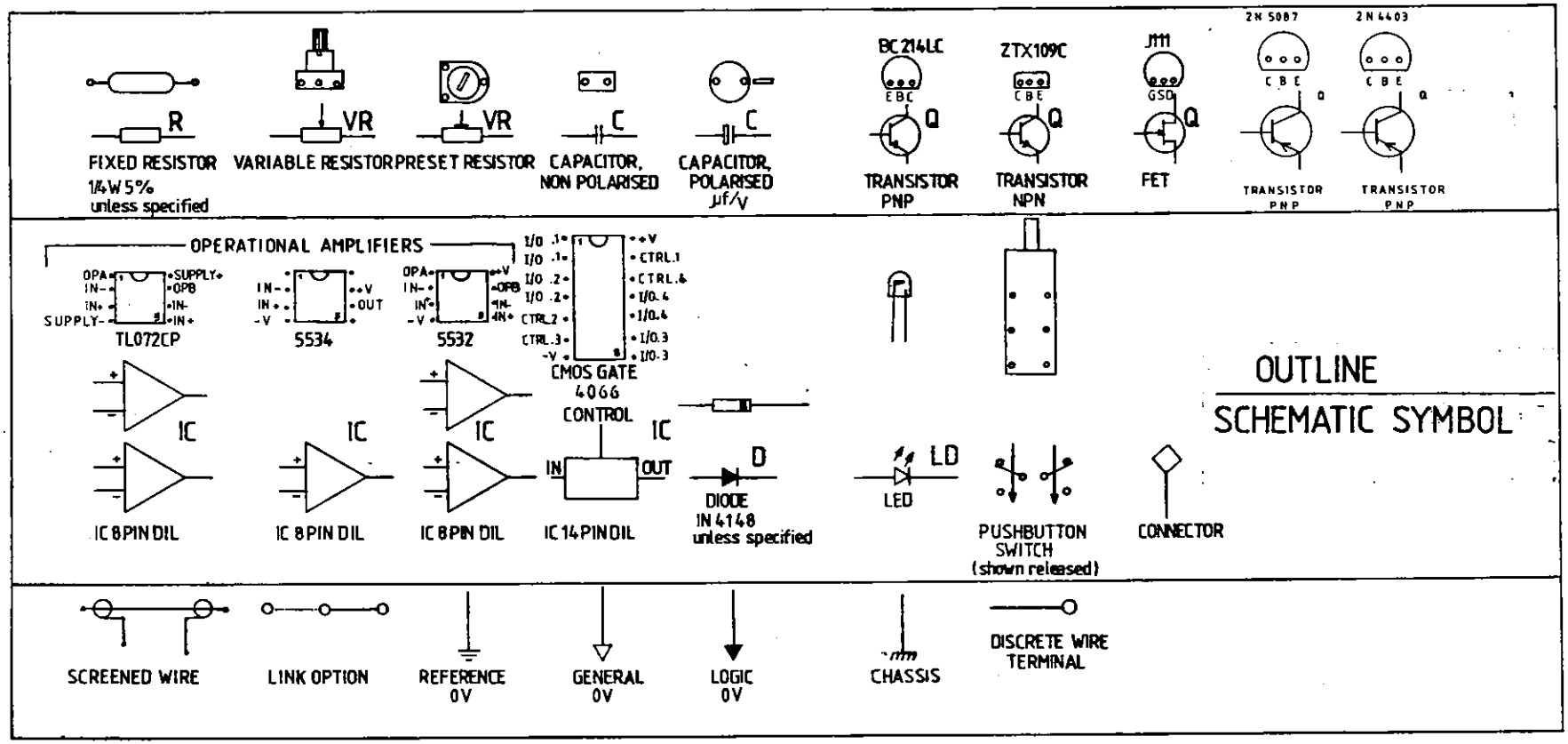

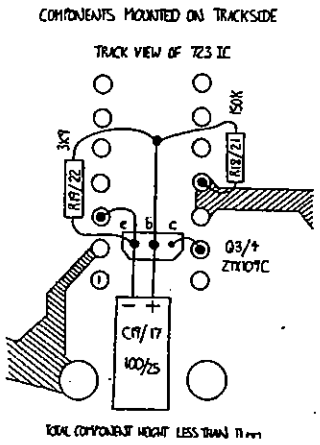

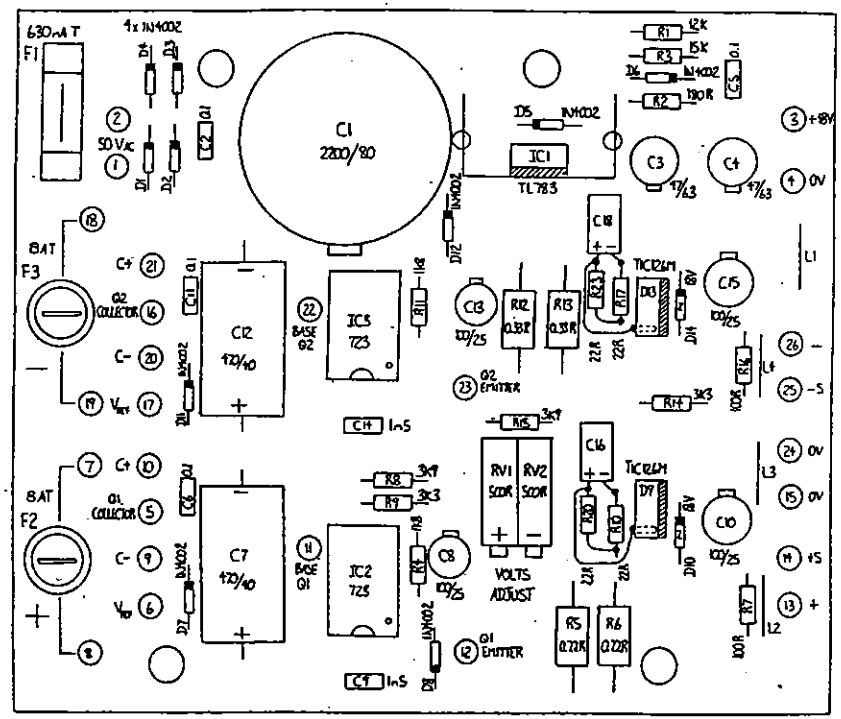

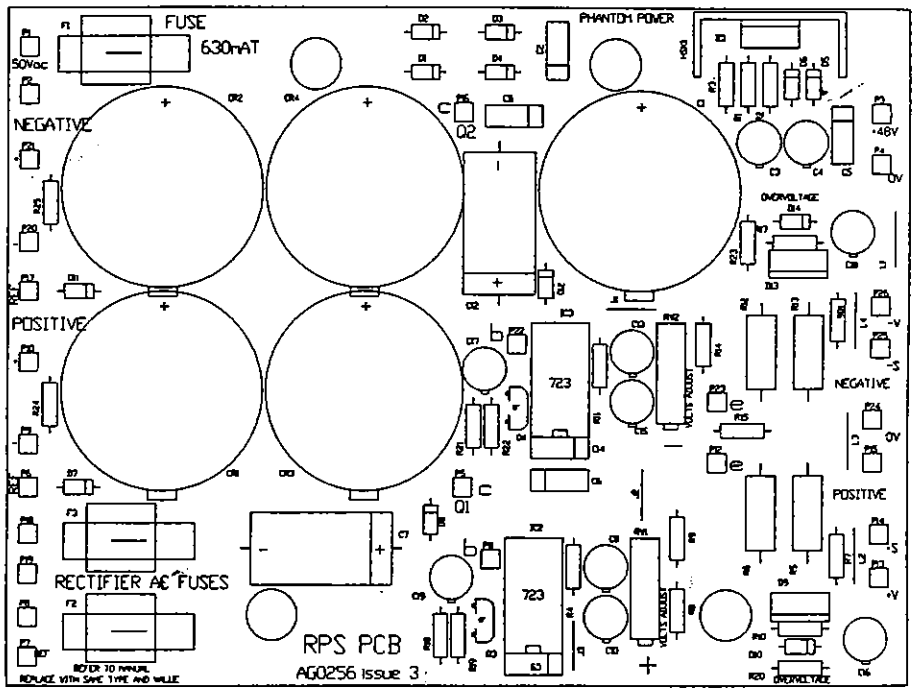

ALLEN + HEATH RPS4 POWER SUPPLY PCB AG0256 ISSUE 2 BW229

BY CD 18.2.91

FV021D COMPONENT PRINT BY CD 6-3-91 A&H 0326 372070

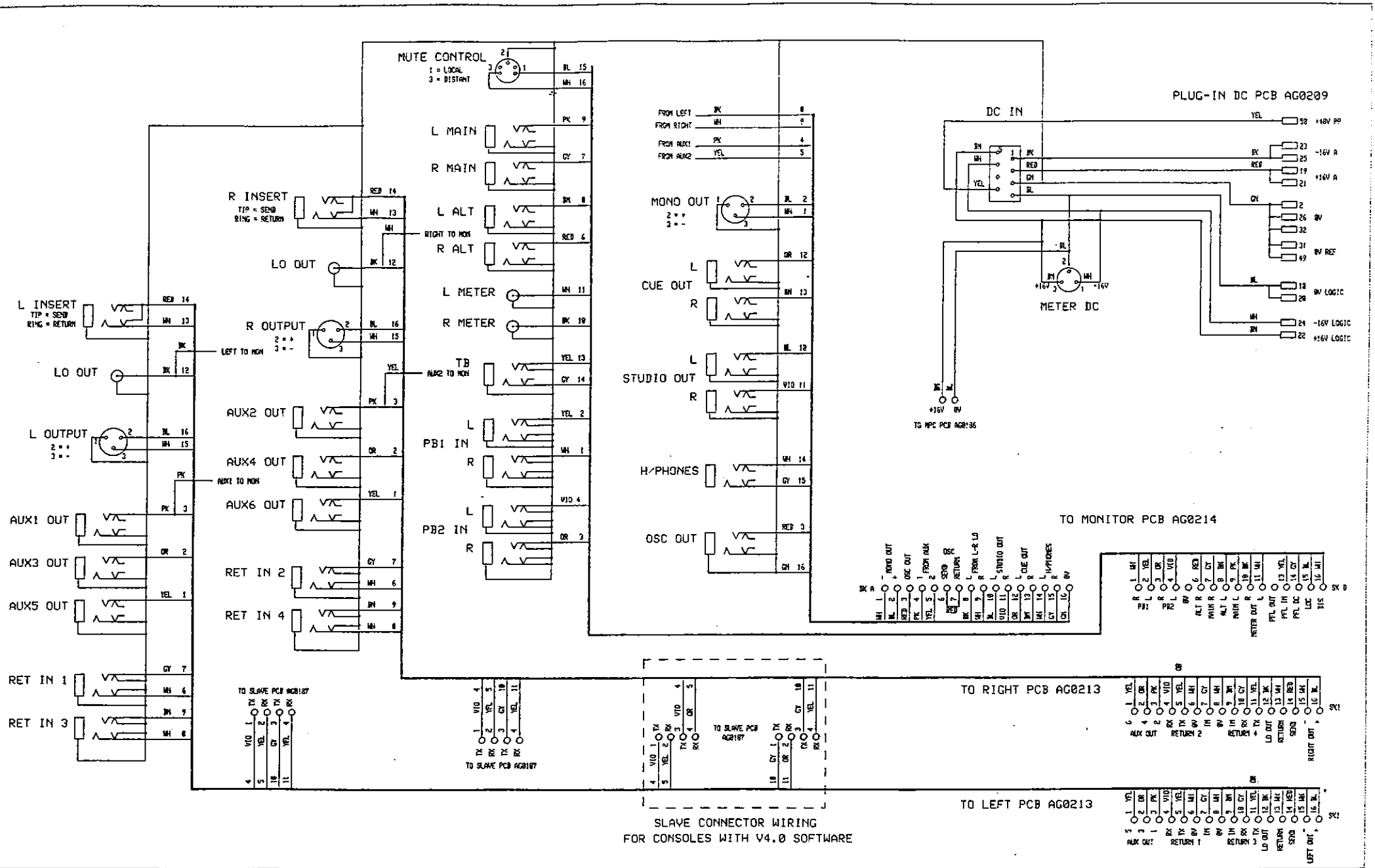

DRAWING No.	BY	DATE
739	CD	8-9-89
ISSUE 2	IMcB	14-3-91

SABER SERIES

CONNECTOR PANEL WIRING M302 - FOR M350 MASTER

ALLEN & HEATH
KERNICK IND. EST. TEL. 0326 72070
PENRYN FAX. 0326 77097
CORNWALL TR10 9LU

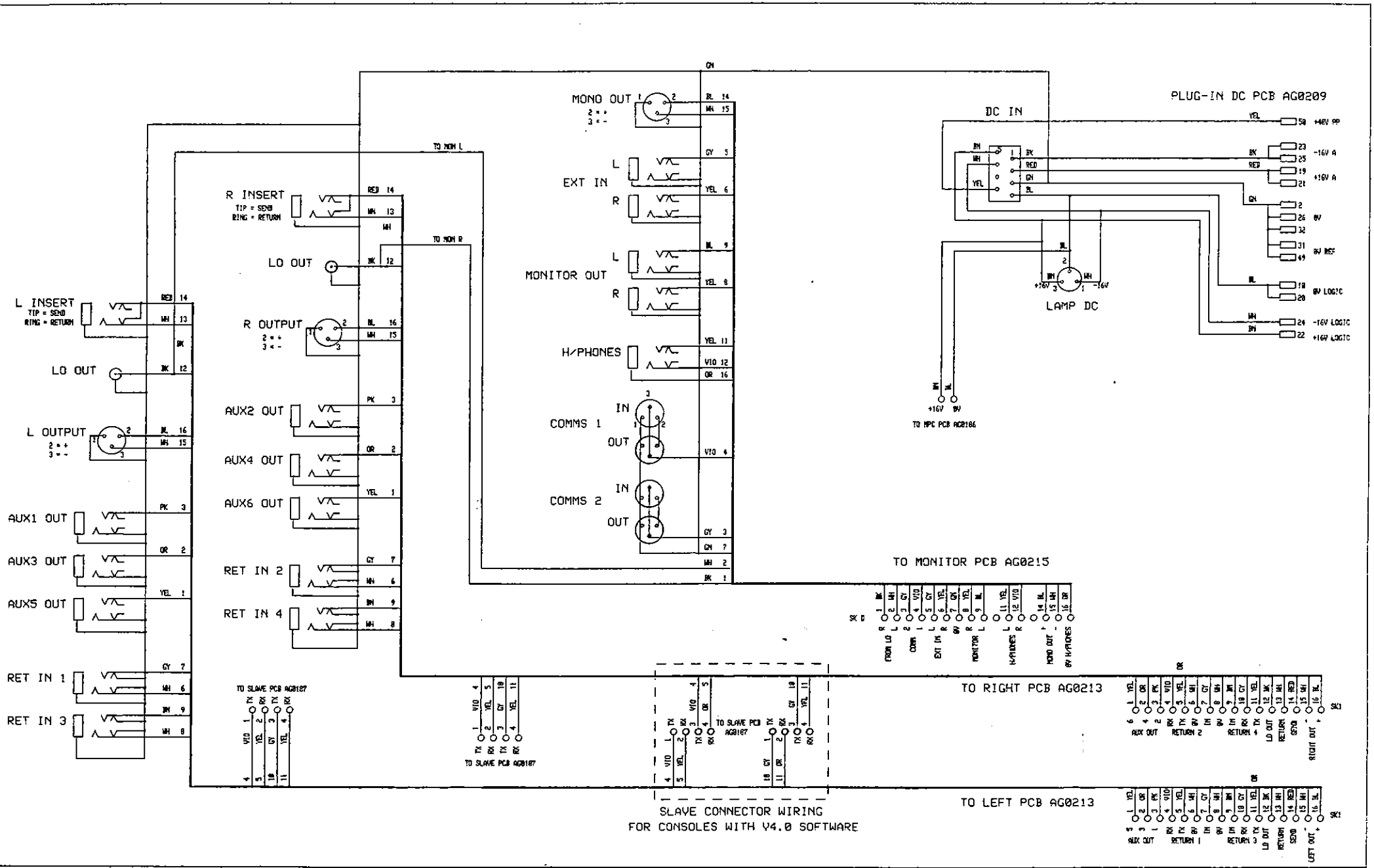

DRAWING No.	BY	DATE
740	CD	14-9-89
ISSUE 2	IMcB	14-3-91

SABER SERIES

CONNECTOR PANEL WIRING M305 - FOR M355 MASTER

ALLEN & HEATH
KERNICK IND. EST. TEL. 0326 72070
PENRYN FAX. 0326 77097
CORNWALL TR10 9LU

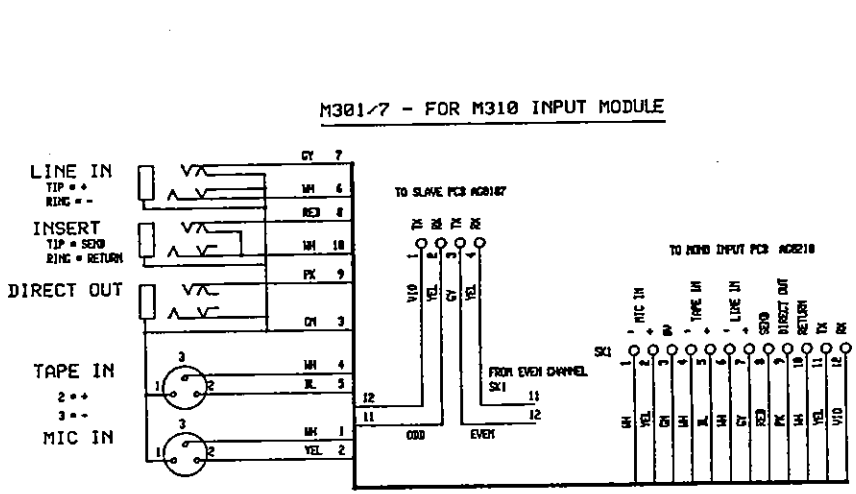

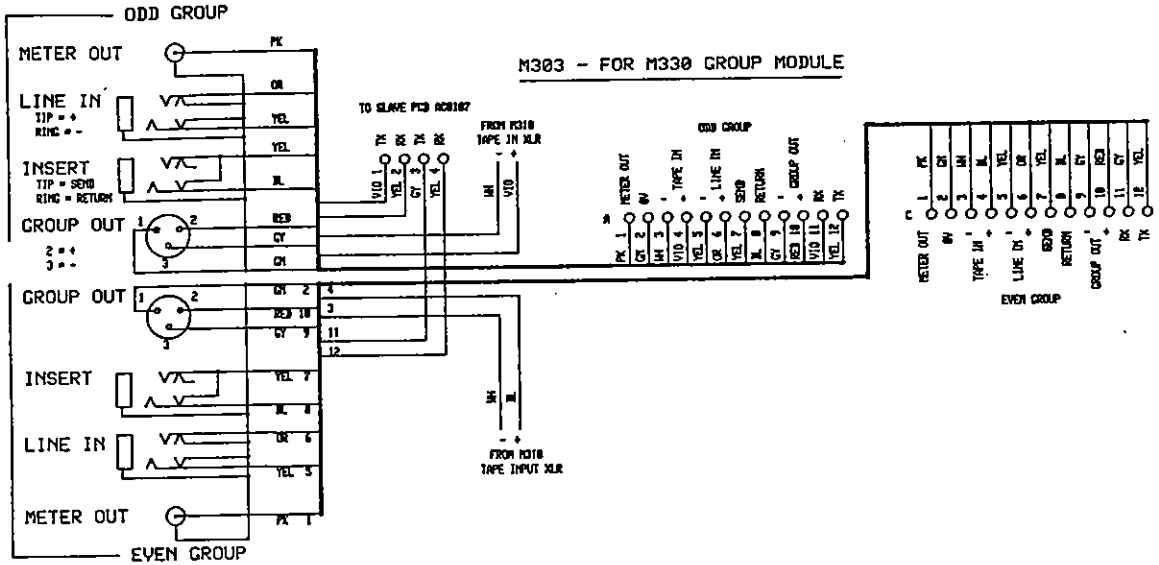

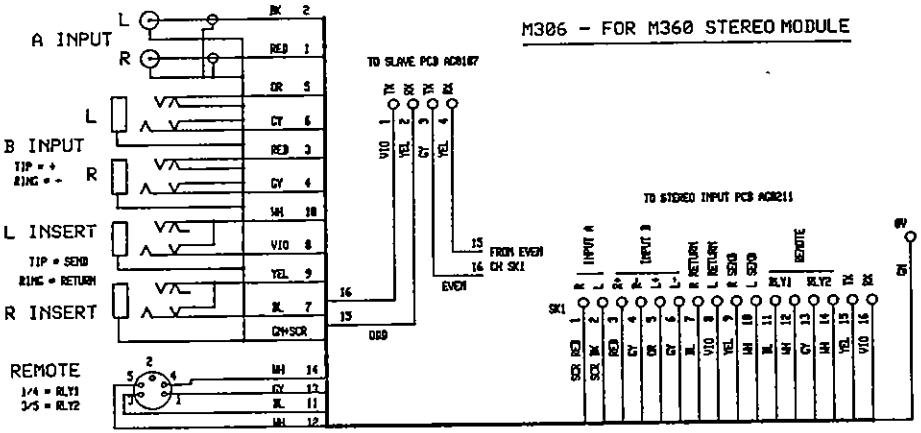

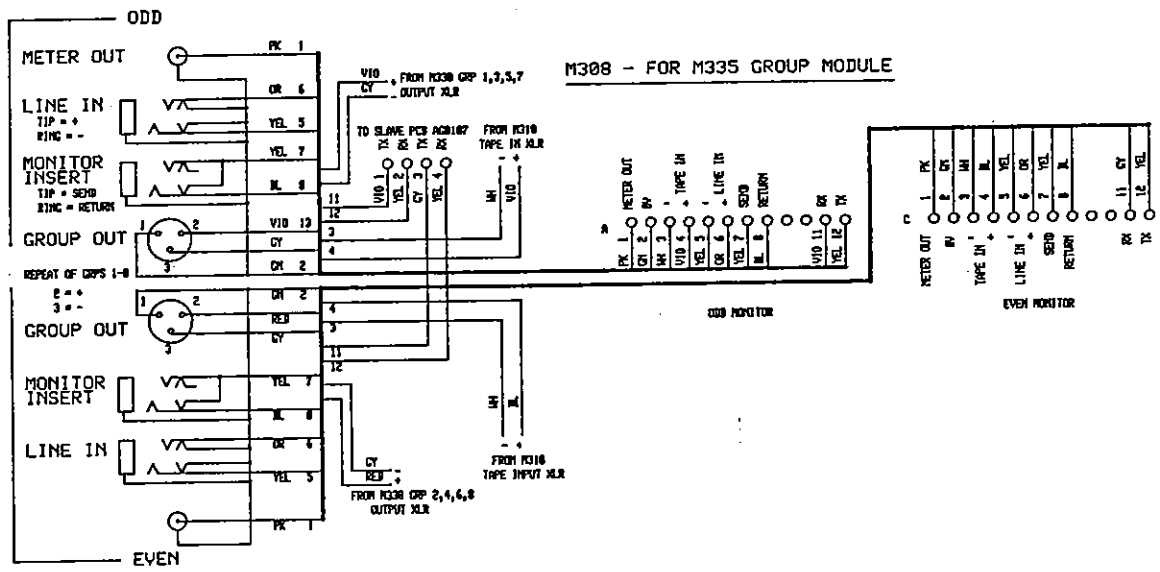

DRAWING No.
738
ISSUE 1

BY DATE

SABER SERIES
CONNECTOR PANEL WIRING

M301/7 - FOR M310 MONO INPUT
M306 - FOR M360 STEREO INPUT
M303 - FOR M330 DUAL GROUP
M335 - FOR M335 DUAL MONITOR

ALLEN & HEATH
KERNICK IND. EST.
PENRYN
CORNWALL TR10 9LU

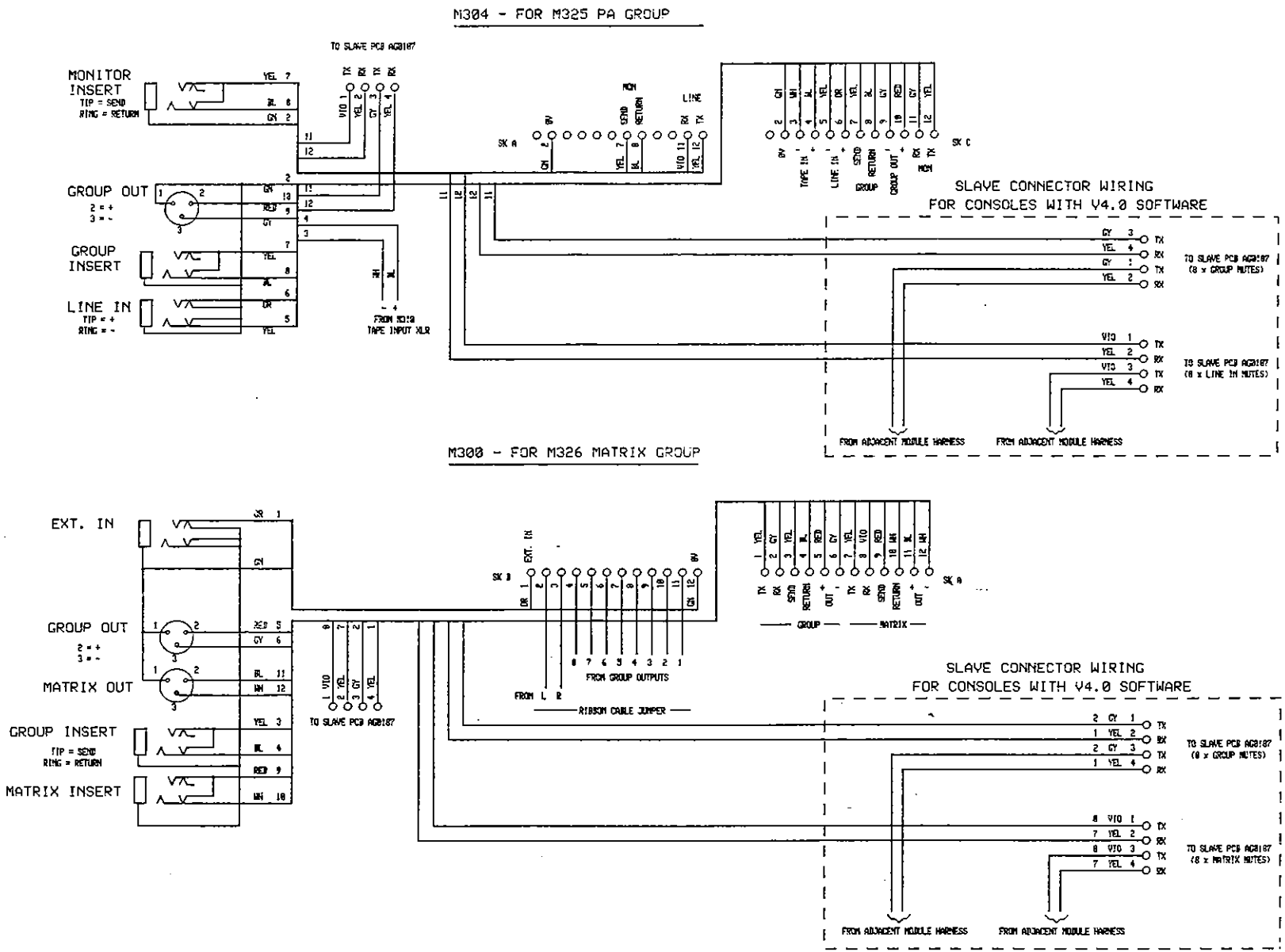

DRAWING No.	BY	DATE
741	CD	17-9-89
ISSUE 2	IMcB	3-4-91

SABER SERIES

CONNECTOR PANEL WIRING

M304 - FOR M325 PA GROUP
M300 - FOR M326 MATRIX GROUP

ALLEN & HEATH
KERNICK IND. EST. TEL. 0326 72070
PENRYN FAX. 0326 77097
CORNWALL TR10 9LU

NEW SABER

BUSS ALLOCATION

CD 30-3-89
743 ISSUE 1

50-way IDC card edge connector 0.1" double sided

INPUT END		TRACK		COMPONENT	
50	+48V	49	0V ref	50	+48V
49	0V ref	47	mix 7	48	mix 15
48	mix 15	45	16	46	8
47	7	43	6	44	14
46	8	41	13	42	5
45	16	39	3	40	11
44	14	37	12	38	4
43	6	35	2	36	10
42	5	33	9	34	1
41	13	31	0V ref	32	0V
40	11	29	mix R-	30	mix R+
39	3	27	L+	28	L-
38	4	25	-16V A	26	0V
37	12	23	-16V A	24	-16V logic
36	10	21	+16V A	22	+16V logic
35	2	19	+16V A	20	0V logic
34	1	17	aux 2	18	aux 1
33	9	15	4	16	3
32	0V	13	6	14	5
31	0V ref	11	PFL - in/mon	12	PFL - aux/rt
30	mix R+	9	PFL DC	10	0V logic
29	R-	7	INPUT solo EN	8	MON solo EN
28	L-	5	INPUT solo DC	6	MON solo DC
27	L+	3	LOCAL	4	DISTANT
26	0V	1	TB audio	2	0V
25	-16V A				
24	-16V logic				
23	-16V A				
22	+16V logic				
21	+16V A				
20	0V logic				
19	+16V A				
18	aux 1				
17	2				
16	3				
15	4				
14	5				
13	6				
12	PFL - aux/ret				
11	PFL - in/mon				
10	0V logic				
9	PFL DC				
8	MON solo EN				
7	INPUT solo EN				
6	MON solo DC				
5	INPUT solo DC				
4	DISTANT				
3	LOCAL				
2	0V				
1	TB audio				

FADER END

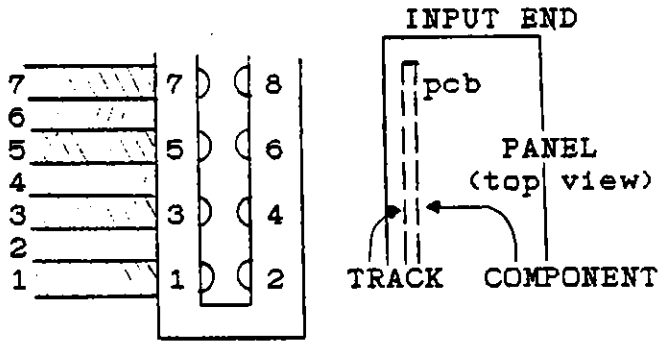

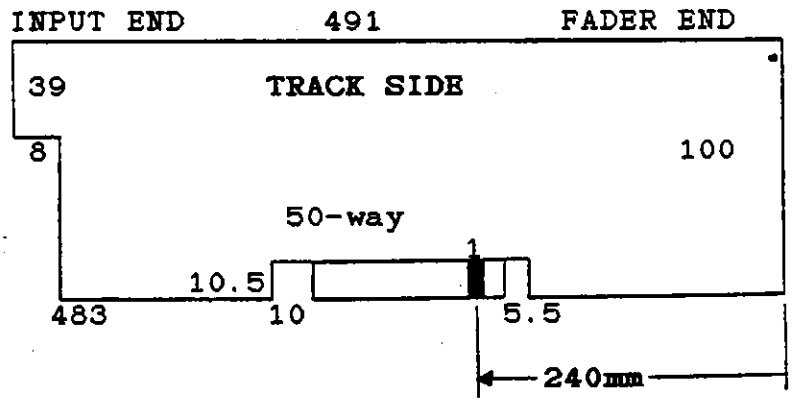

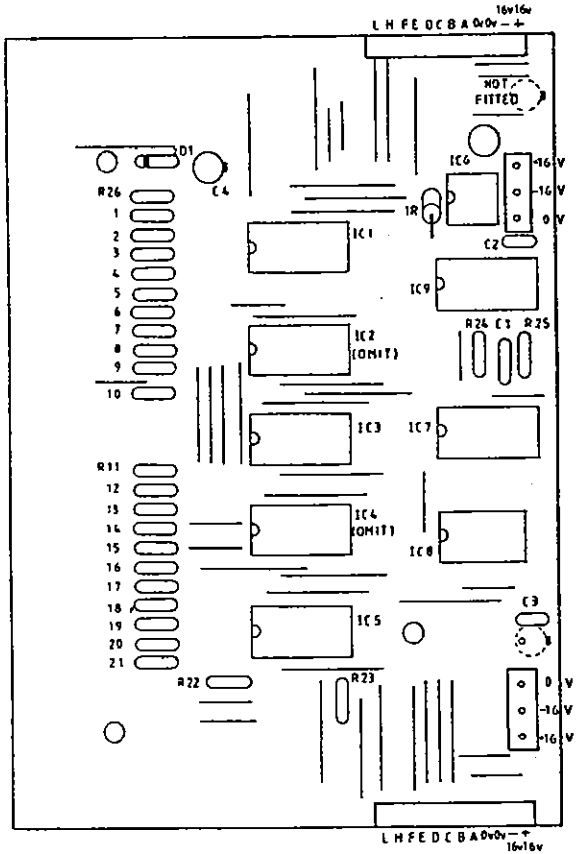

MASTER PCB. AG 0192 ISS. 3

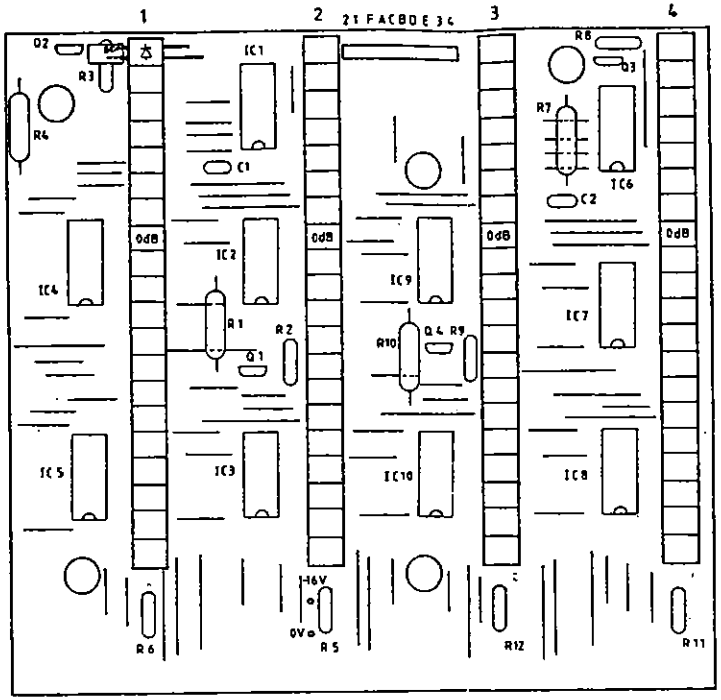

DISPLAY PCB. AG 0190 ISS. 2

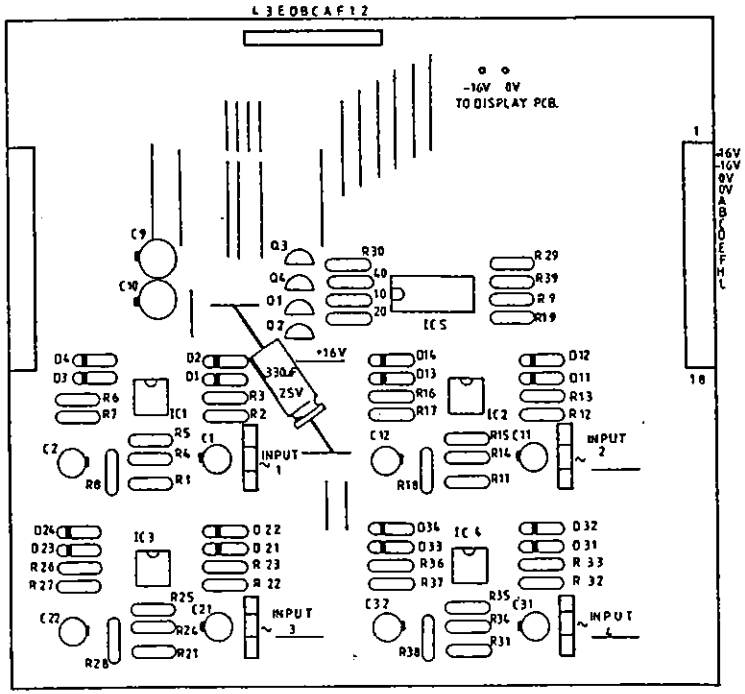

RECTIFIER PCB. AG 0191 ISS. 3

ALLEN&HEATH
BARGRAPH METERS

DRAWING NO. BW 223 ISS. 1

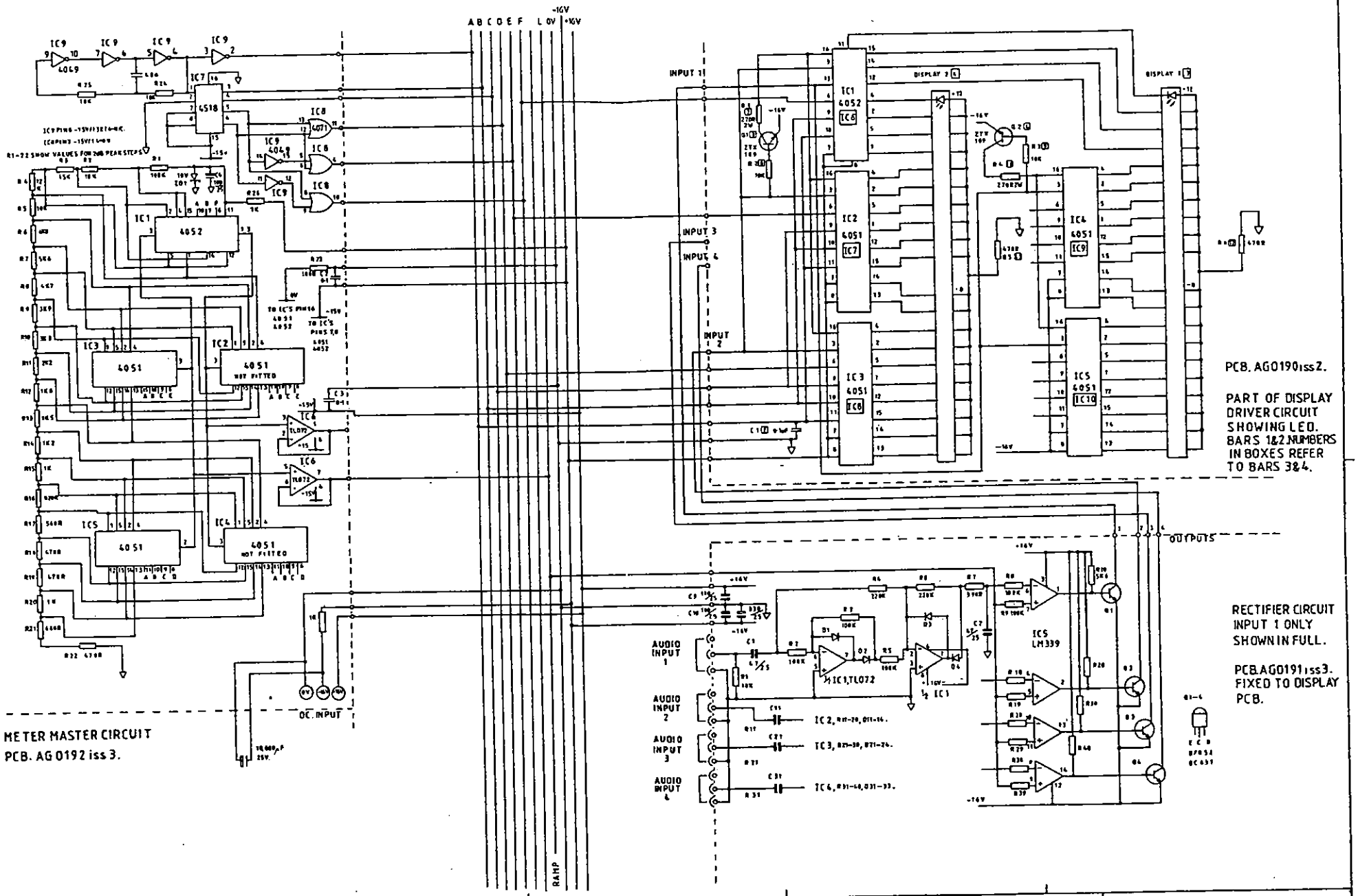

STANDARD NOTES
ALL DIMENSIONS IN mm
DO NOT SCALE DRAWING
THIRD ANGLE PROJECTION
REMOVE ALL BURRS & SHARP EDGES

SCALE

MATERIAL

TOLERANCES
GENERAL ±0.25 mm
HOLE CENTRES ±0.15 mm
HOLE SIZES ±0.10 mm

FINISH

NOTES
APPLIES TO PCB. TYPES:
MASTER – AG0192 iss. 3
RECTIFIER – AG0191 iss.3
DISPLAY – AG0190 iss.2

UNIT TITLE
ALLEN & HEATH

DRAWING TITLE
BARGRAPH METER CIRCUIT

AHB
ALLEN & HEATH BRENELL LTD

DRAWING No. 189

SHEET 5.

E.J. 1988

UN TED 01

DRAWING NO

BARGRAPH METER POD, REAR VIEW, COVER REMOVED

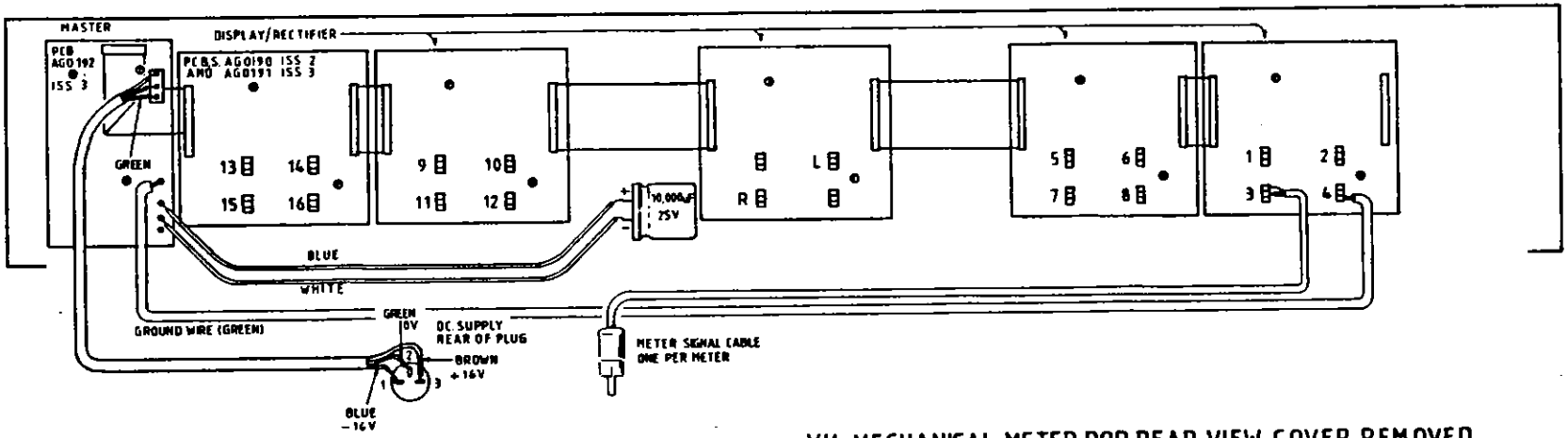

VU. MECHANICAL METER POD, REAR VIEW, COVER REMOVED

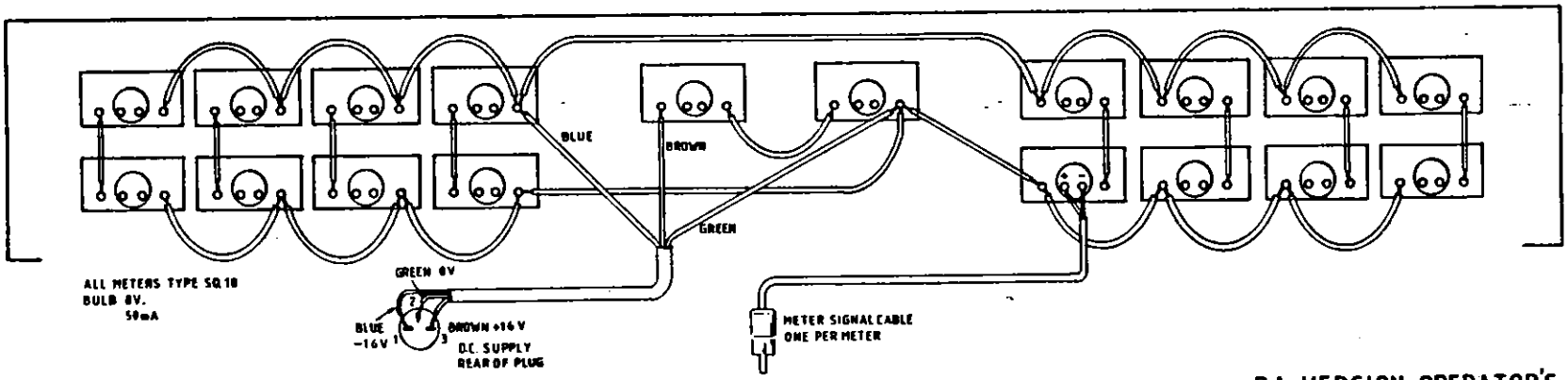

P.A. VERSION OPERATOR'S LAMP WIRING

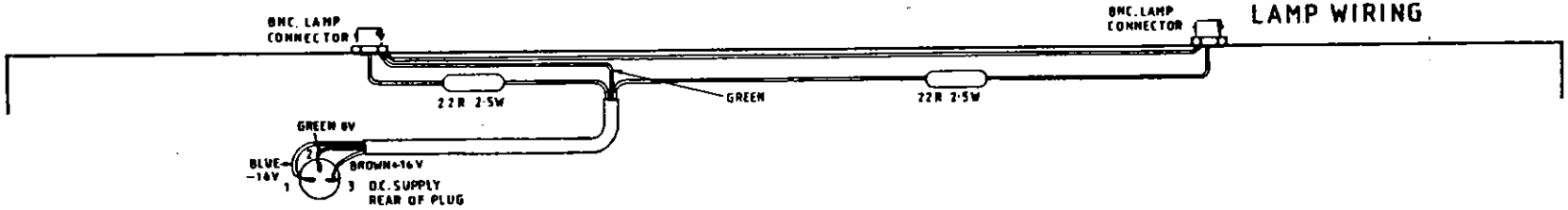

E.J.		1088	STANDARD NOTES: ALL DIMENSIONS IN mm; DO NOT SCALE DRAWING; THIRD ANGLE PROJECTION; REMOVE ALL BURRS & SHARP EDGES	MATERIAL	TOLERANCES: GENERAL ±0.25 mm; HOLE CENTRES ±0.15 mm; HOLE SIZES ±0.10 mm; UNLESS STATED OTHERWISE	FINISH	NOTES	UNIT TITLE: ALLEN&HEATH SABER
			SCALE					DRAWING TITLE: METERPOD WIRING AND P.A.LAMP WIRING

AHB — ALLEN & HEATH BRENNELL LTD

DRAWING No. 665 — ISSUE 1

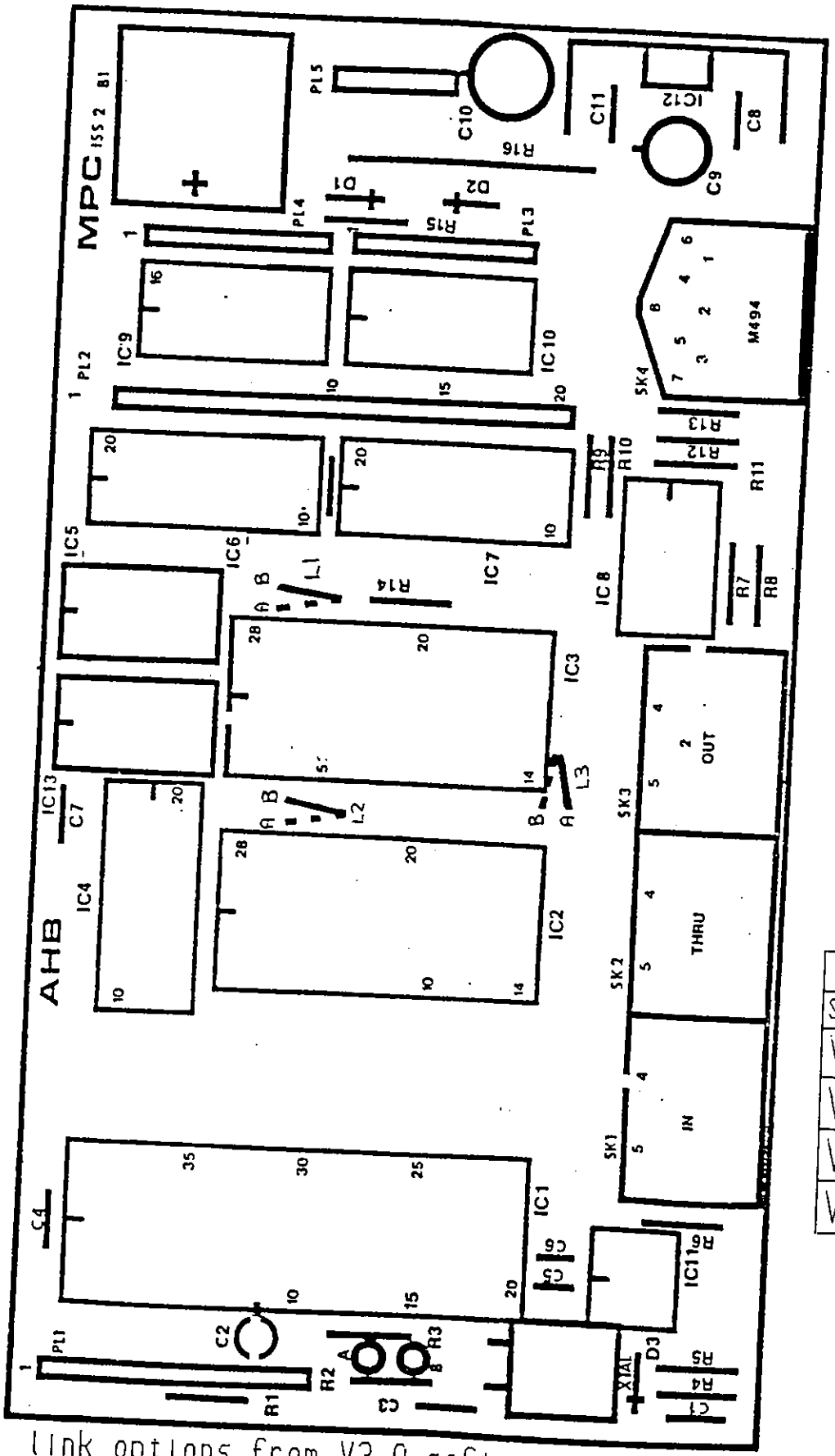

LINK OPTIONS			
SOFTWARE	L1	L2	L3
V1	A	A	A
V2	A	A	A
V3	B	B	A
V4	B	B	A

link options from V3.0 software onwards

AHB
ALLEN & HEATH BRENELL LTD.
PROFESSIONAL AUDIO EQUIPMENT MANUFACTURERS
'DESIGN DEPT'
'FACTORY' KERNICK INDUSTRIAL EST. PENRYN, CORNWALL Tel (0326) 72070

DRAWING No. BW224 | Issue 2

MUTE PROCESSOR COMPUTER PCB ASSEMBLY

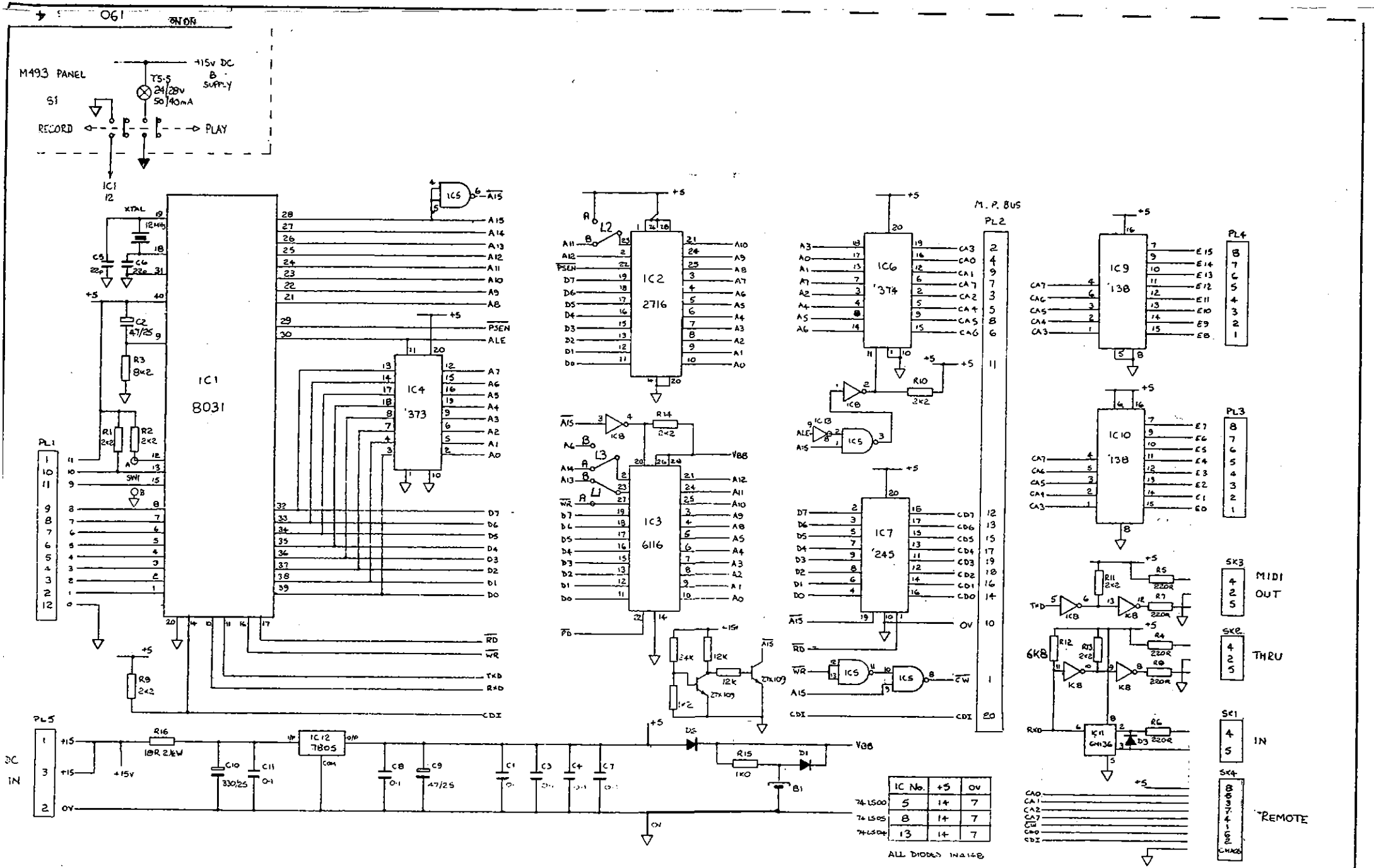

IC No.	+5	0V
74LS00	5	14	7
74LS05	8	14	7
74LS04	13	14	7

DRAWN	REVISION	DATE	CHECKED
DKB	LINKS ADJUSTED FOR V4	19-8-89	
[illegible]	VIRTIC PROTECT CCT ADDED	2/9/89	
[illegible]	[illegible]	[illegible]	

STANDARD NOTES
ALL DIMENSIONS IN mm
DO NOT SCALE DRAWING
THIRD ANGLE PROJECTION
REMOVE ALL BURRS & SHARP EDGES

SCALE

MATERIAL

TOLERANCES
GENERAL ±0.25 mm
HOLE CENTRES ±0.15 mm
HOLE SIZES ±0.10 mm

UNLESS STATED OTHERWISE

FINISH

NOTES
PCB A118 MPC A60186

UNIT TITLE
AHB MUTE PROCESSOR

DRAWING TITLE
AHB MUTE PROCESSOR CARD

AHB
ALLEN & HEATH BRENELL LTD
PROFESSIONAL AUDIO EQUIPMENT MANUFACTURERS
DESIGN DEPT. GILSHIP STREET, [illegible] Tel [illegible]
FACTORY: [illegible] INDUSTRIAL EST. [illegible] Tel [illegible]

DRAWING No. MBD'190 Issue 4

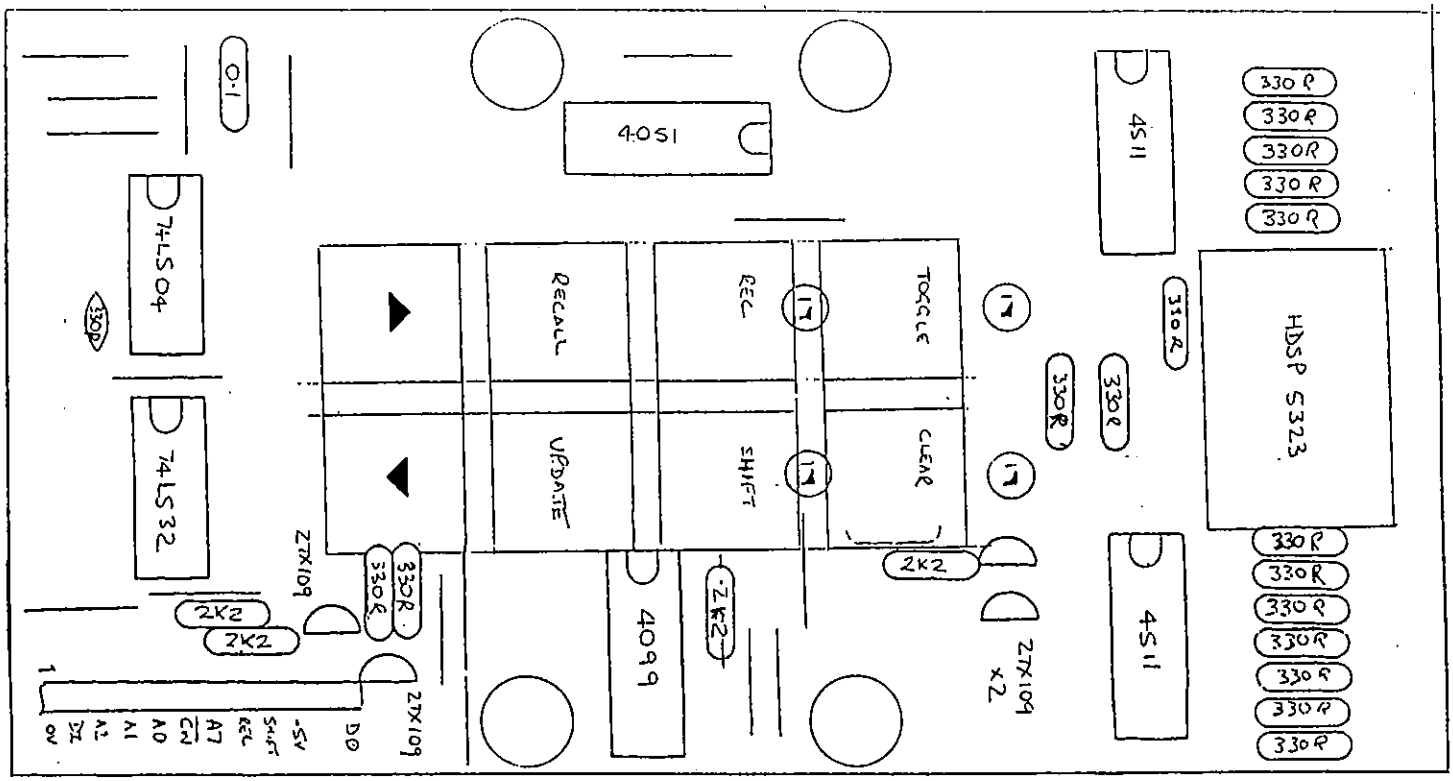

MUTE PROCESSOR KEYBOARD PCB. AG0218 Iss 1

DRAWING NO. BW225 Iss 1

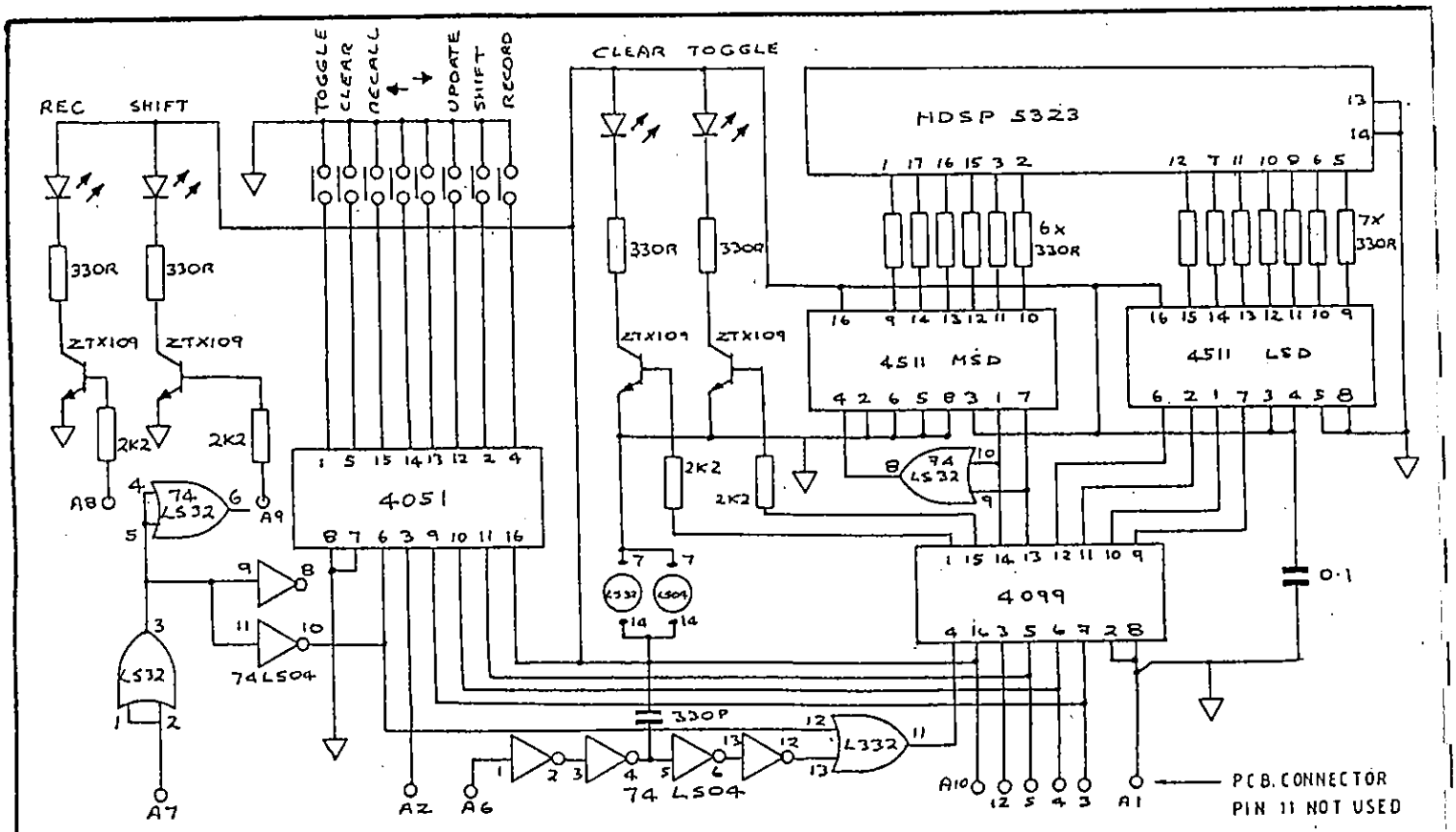

AHB — ALLEN & HEATH BRENELL LTD. PROFESSIONAL AUDIO EQUIPMENT MANUFACTURERS. 'DESIGN DEPT' 69 SHAW STREET, BRIGHTON BN1 1AE Tel (01273) 24939. 'FACTORY' KERNOW INDUSTRIAL EST, PENRYN, CORNWALL. Tel (01326) 72079		TITLE: MUTE PROCESSOR	
DRAWING No. 698	Issue 1	KEYBOARD PCB. AG0218 ISSUE 1 CIRCUIT DIAGRAM	ORG. No. 698. ISS. 2

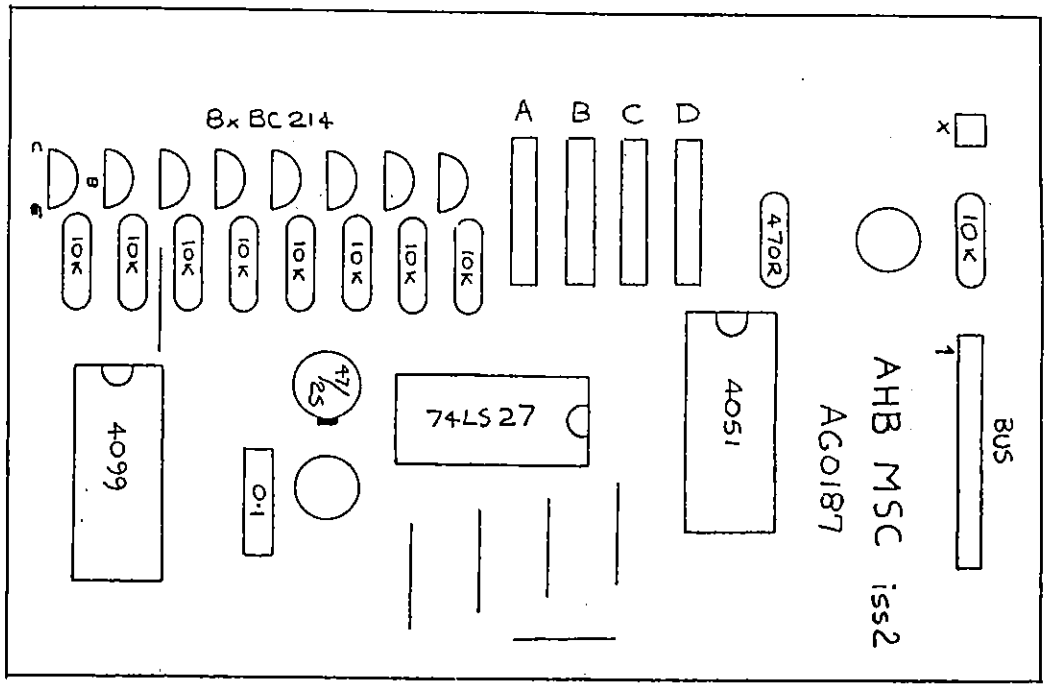

MUTE PROCESSOR SLAVE PCB:
DRAWING NO. BW226 Iss. 1

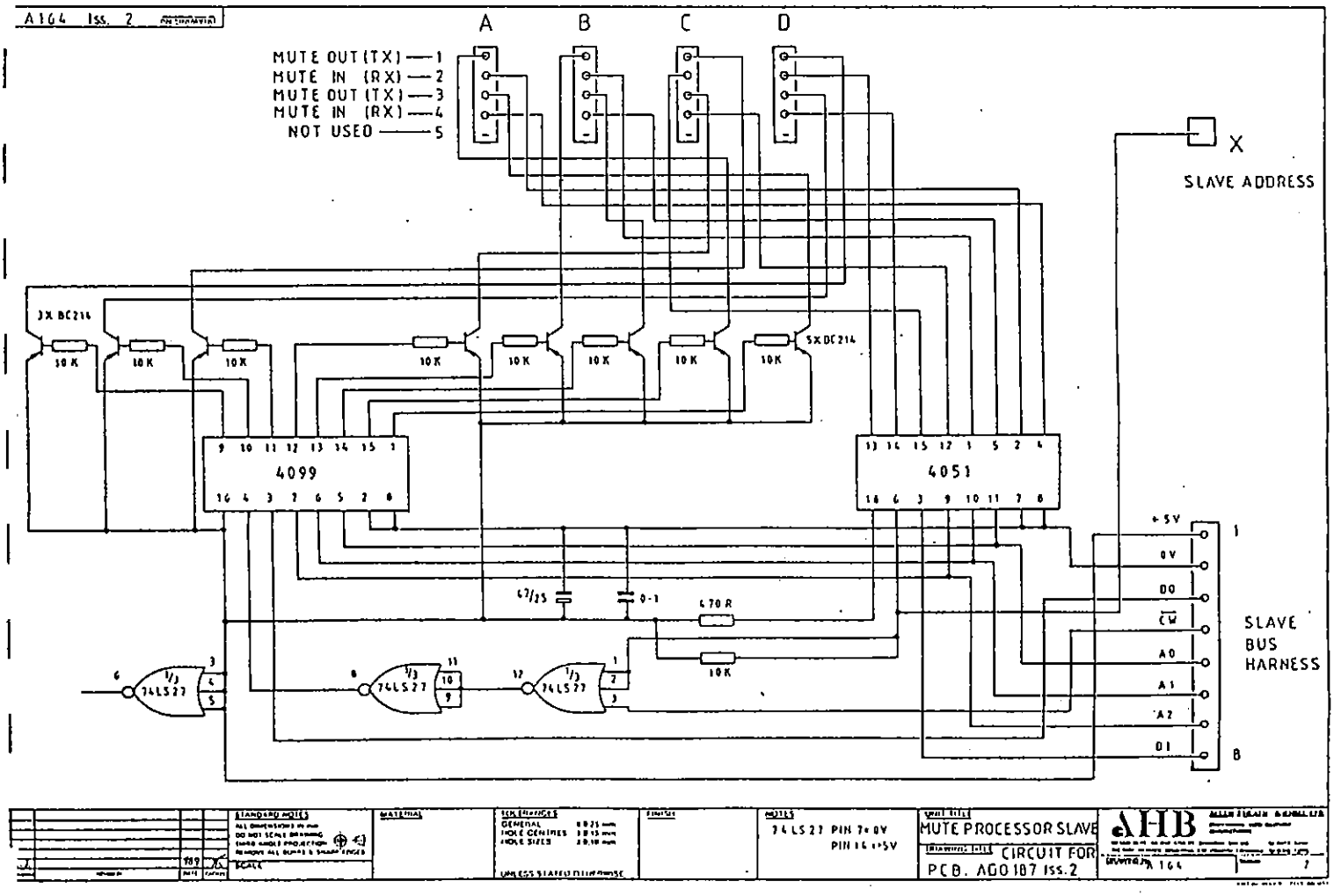

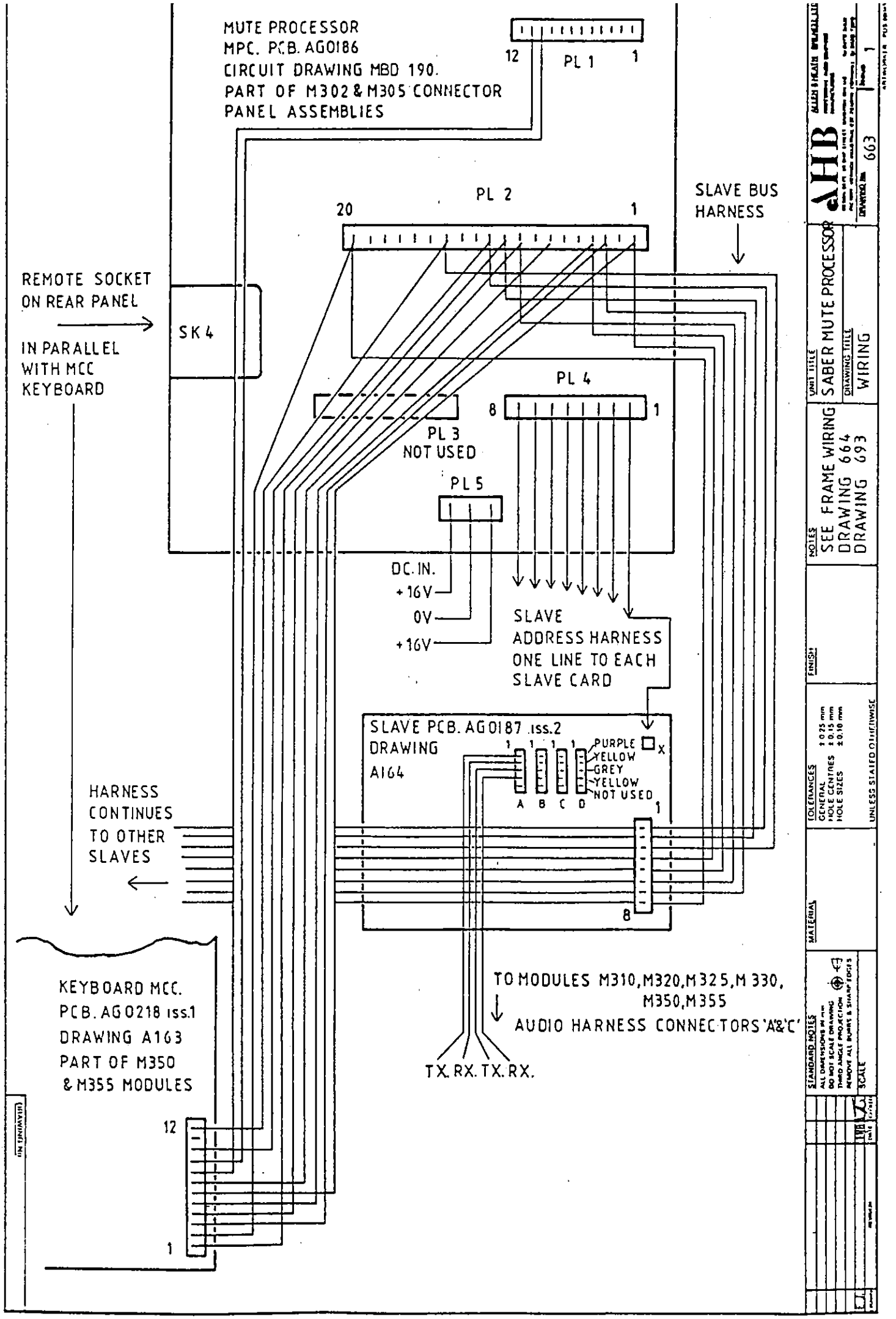
MUTE PROCESSOR
MPC. PCB. AG0186
CIRCUIT DRAWING MBD 190.
PART OF M302 & M305 CONNECTOR
PANEL ASSEMBLIES
12
PL 1
1
PL 2
20
1
SLAVE BUS
HARNESS
REMOTE SOCKET
ON REAR PANEL
SK 4
IN PARALLEL
WITH MCC
KEYBOARD
PL 4
8
1
PL 3
NOT USED
PL 5
DC. IN.
+16V
0V
+16V
SLAVE
ADDRESS HARNESS
ONE LINE TO EACH
SLAVE CARD
SLAVE PCB. AG0187 iss.2
DRAWING
A164
1 1 1 1
PURPLE
YELLOW
GREY
YELLOW
NOT USED
X
A B C D
1
8
HARNESS
CONTINUES
TO OTHER
SLAVES
KEYBOARD MCC.
PCB. AG0218 iss.1
DRAWING A163
PART OF M350
& M355 MODULES
TO MODULES M310, M320, M325, M330,
M350, M355
AUDIO HARNESS CONNECTORS 'A' & 'C'
TX. RX. TX. RX.
12
1
AHB
ALLEN & HEATH BRENNELL
DRAWING No. 663
UNIT TITLE
SABER MUTE PROCESSOR
DRAWING TITLE
WIRING
NOTES
SEE FRAME WIRING
DRAWING 664
DRAWING 693
FINISH
TOLERANCES
GENERAL ± 0.25 mm
HOLE CENTRES ± 0.15 mm
HOLE SIZES ± 0.10 mm
UNLESS STATED OTHERWISE
MATERIAL
STANDARD NOTES
ALL DIMENSIONS IN mm
DO NOT SCALE DRAWING
THIRD ANGLE PROJECTION
REMOVE ALL BURRS & SHARP EDGES
SCALE

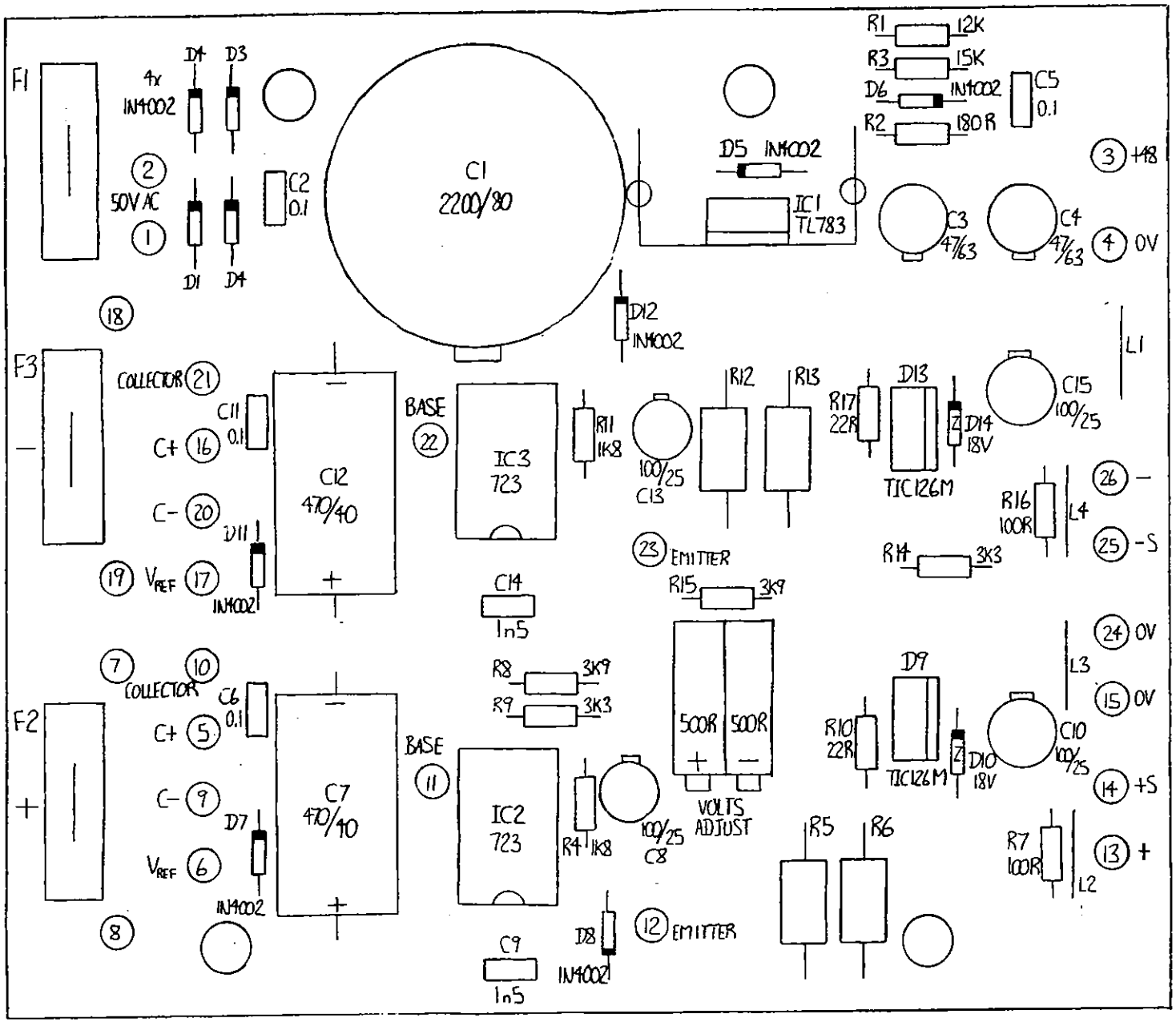

ALLEN + HEATH PSU PCB AG0256 ISSUE 2

ARTWORK BW229
BY CD 26-4-89

MCC KEYBOARD
PCB AG0218 ISS.1
CIRCUIT DRAWING 698

PART OF M350
& M355 MODULES.

HARNESS CONTINUES
TO OTHER SLAVES

SLAVE ADDRESS HARNESS.
ONE LINE TO
EACH SLAVE CARD

REMOTE SOCKET
ON REAR PANEL

(IN PARALLEL
WITH MCC KEYBOARD)

MUTE PROCESSOR
MPC.PCB AG0186
CIRCUIT DRAWING
MB0190

SK4

TO SCREEN
ON MCC KEYBOARD
HARNESS

1 12

SLAVE PCB
AG0187 ISS.2
CIRCUIT DRAWING:
A164

TX
RX

TX
RX

TO MODULES M310.M320.
M325.M330.M350.M355
AUDIO HARNESS CONNECTORS A&C

A 1
B 1
C 1
D 1

VIOLET
YELLOW
GREY
YELLOW
NOT USED

8 1

PL5
+16V
DC IN 0V
+16V

PL3 8 1
PL4 8 1
PL2 1 12
PL1 12 1

MCN 17-24
MCN 9-16
MCN 1-8
FX RET 1-4
CHAN 41-48
CHAN 33-40
CHAN 25-32
CHAN 17-24
CHAN 9-16
CHAN 1-8

SLAVE BUS HARNESS

ISSUE	REVISION	BY	DATE
1	ORIGIN	EJ	7-11-88
2	RECONFIGURED SLAVE ADDRESS HARNESS	IMcB	14-2-91

NOTES.

SEE FRAME WIRING:
Drawing No: 664
Drawing No: 693

DRAWING TITLE

SABER MUTE PROCESSOR WIRING
(consoles with V4 software only.)

ALLEN & HEATH

ALLEN & HEATH BRENELL LTD.
KERNICK INDUSTRIAL ESTATE.
PENRYN. CORNWALL TR10 9LU.

DRAWING No. 663 ISSUE 2

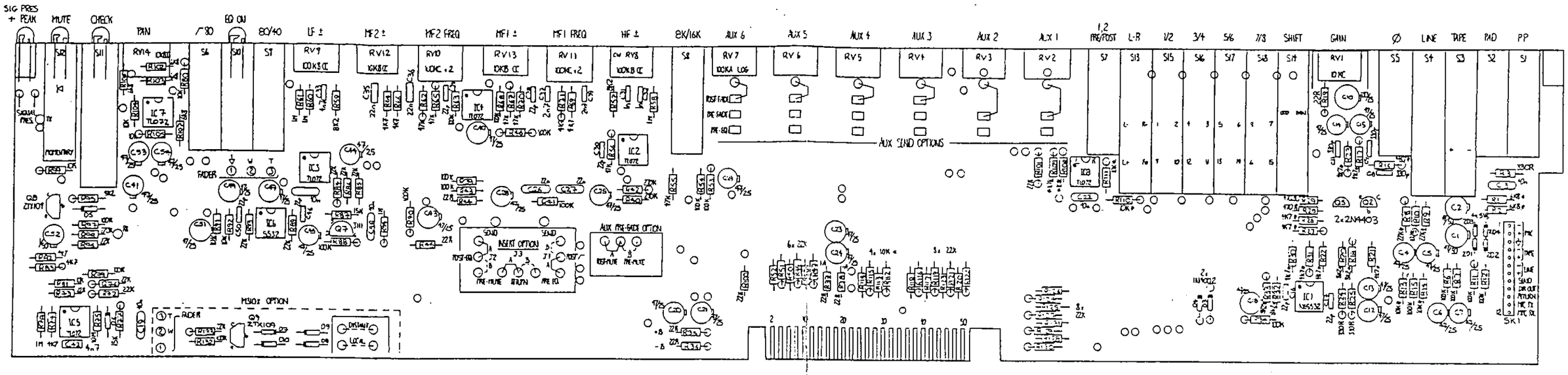

ALLEN + HEATH SABER MONO INPUT M310-1(X) PCB AG0210 ISSUE 1

DRAWING No. BW353 ISSUE 2

DRAWN BY: CD 13-6-88 ISSUE 2-2-91

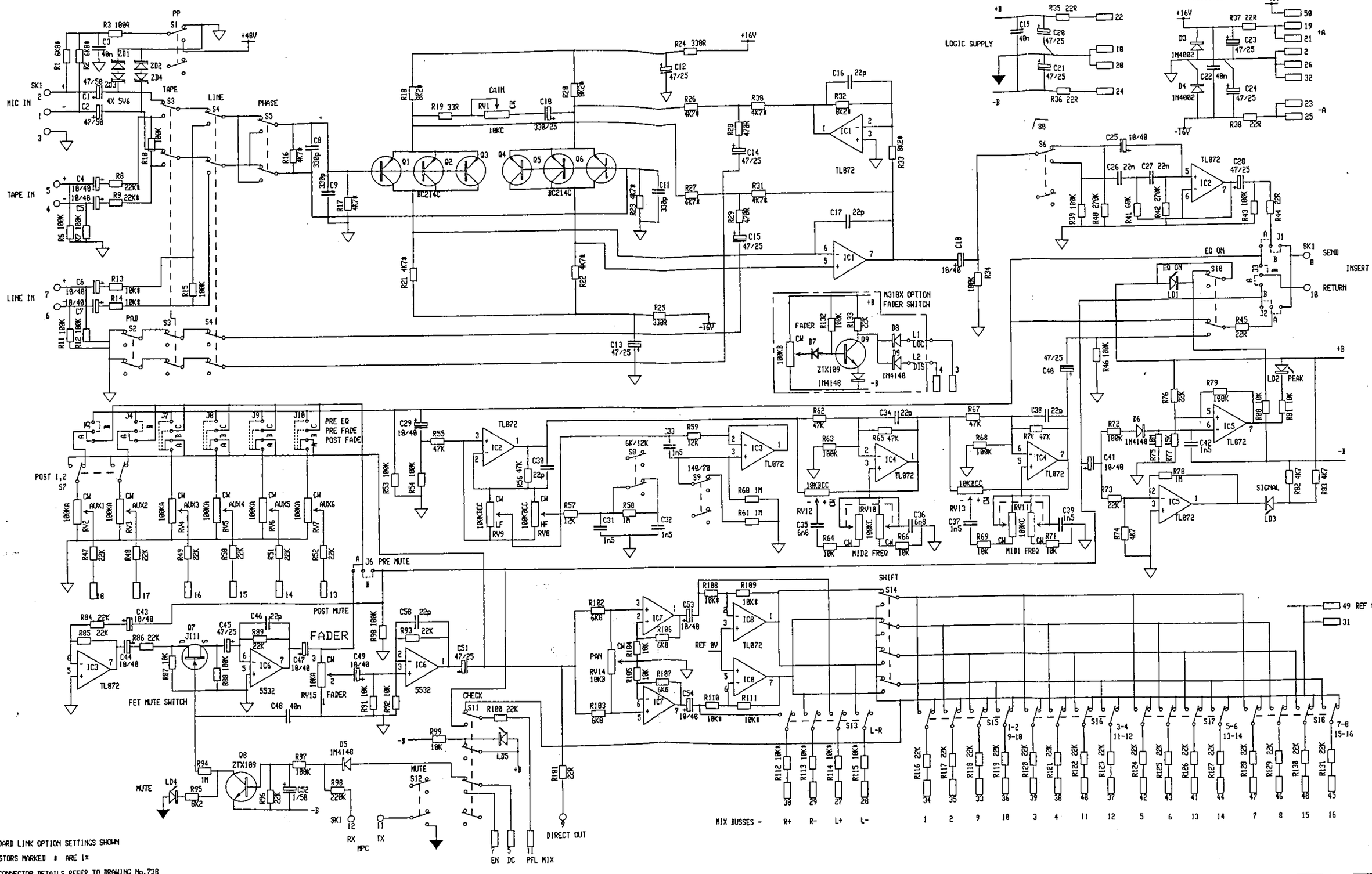

STANDARD LINK OPTION SETTINGS SHOWN

RESISTORS MARKED * ARE 1%

FOR CONNECTOR DETAILS REFER TO DRAWING No.738

DRAWING No.		SABER SERIES	ALLEN & HEATH
723 ISSUE 2	BY CD DATE 30-1-90	M310 MONO INPUT PCB TYPE AG0210 issue 1	KERNICK IND. EST. PENRYN CORNWALL TR109LU

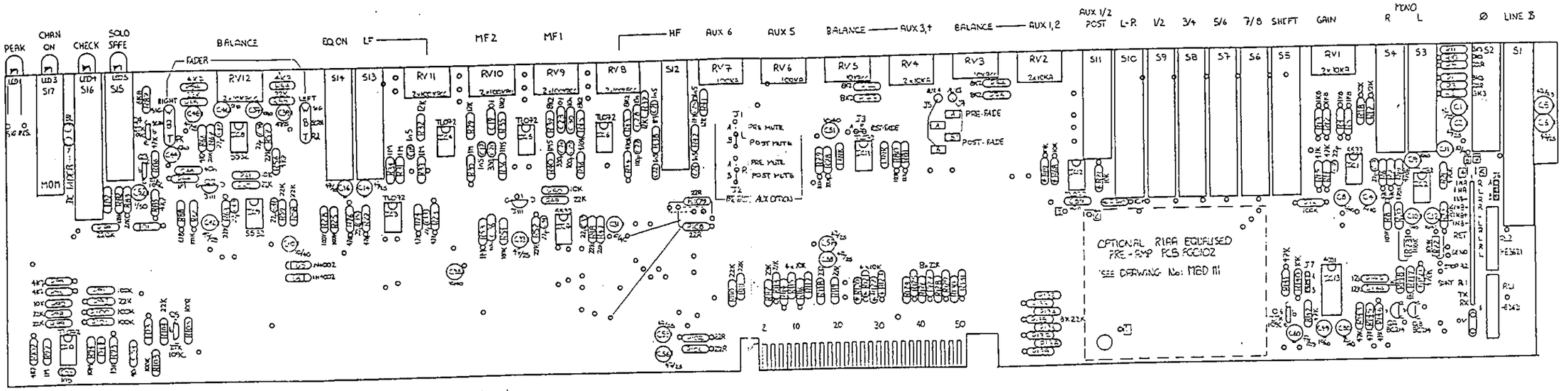

ALLEN + HEATH SABER STEREO PCB M360 MODULE PCB AG0211 Issue 1

DRAWING No BW368 Issue 2

DRAWN BY I M+B 12-10-89 / 28-2-91

M6D FOR PRE-EQ INSERTS 28-2-91

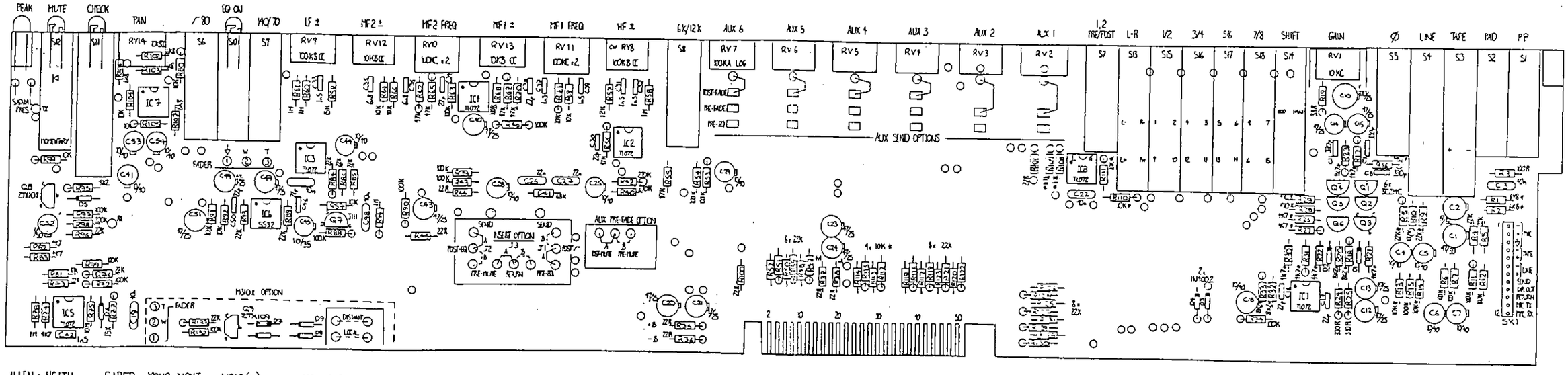

ALLEN+HEATH SABER MONO INPUT M310(X) PCB AG0210 ISSUE 1

DRAWING No BW353/

DRAWN BY CD 13-6-97

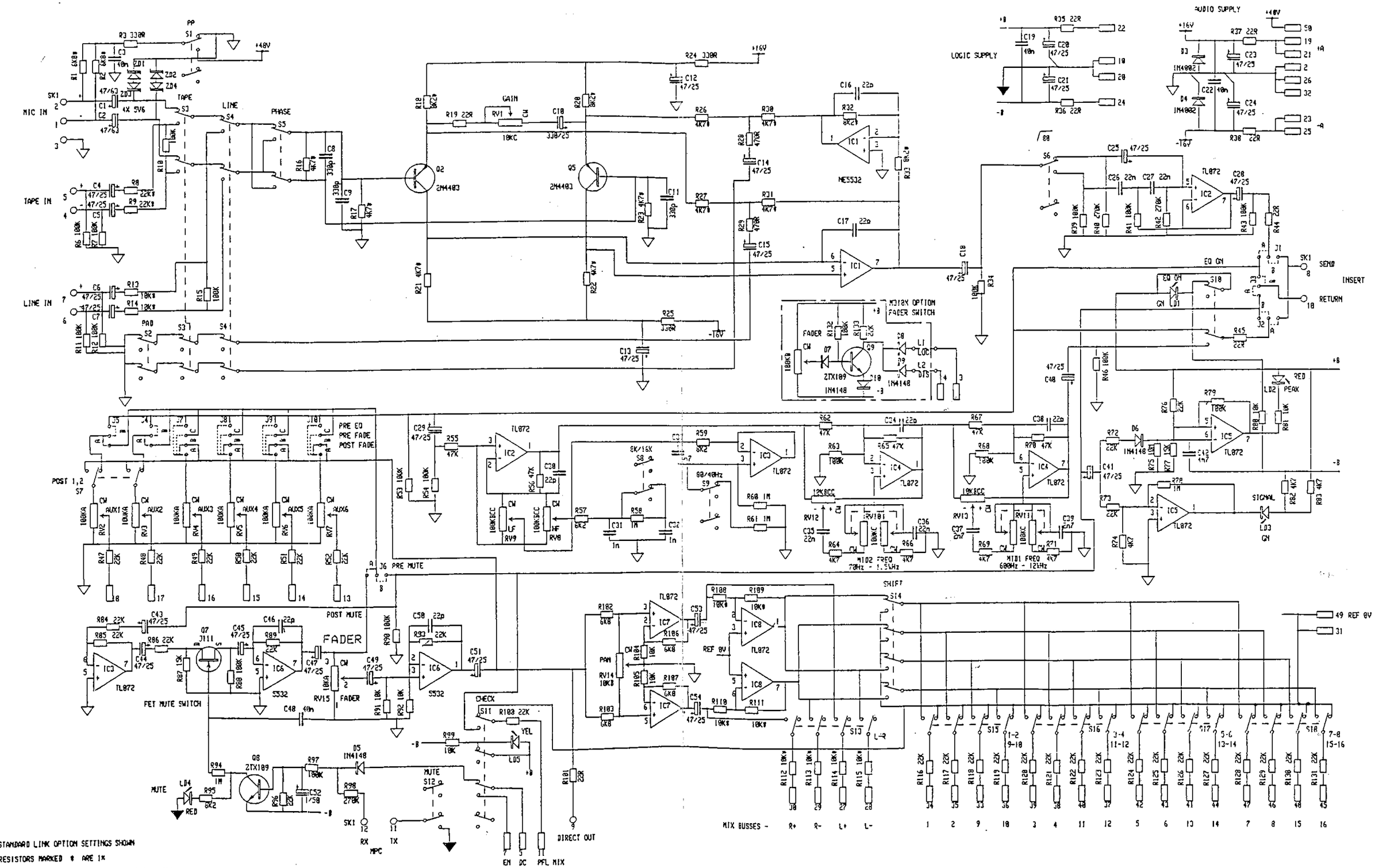

STANDARD LINK OPTION SETTINGS SHOWN

RESISTORS MARKED * ARE 1%

FOR CONNECTOR DETAILS REFER TO DRAWING No.739

DRAWING No. 723 ISSUE 3 REVISED EQUALISER RANGE ADDITION OF SIG.PRES AND EQ LED	BY DATE CD 12-2-91	SABER SERIES M310.1 MONO INPUT PCB TYPE AG0210 issue 1

ALLEN & HEATH
KERNICK IND. EST.
PENRYN
CORNWALL TR109LU

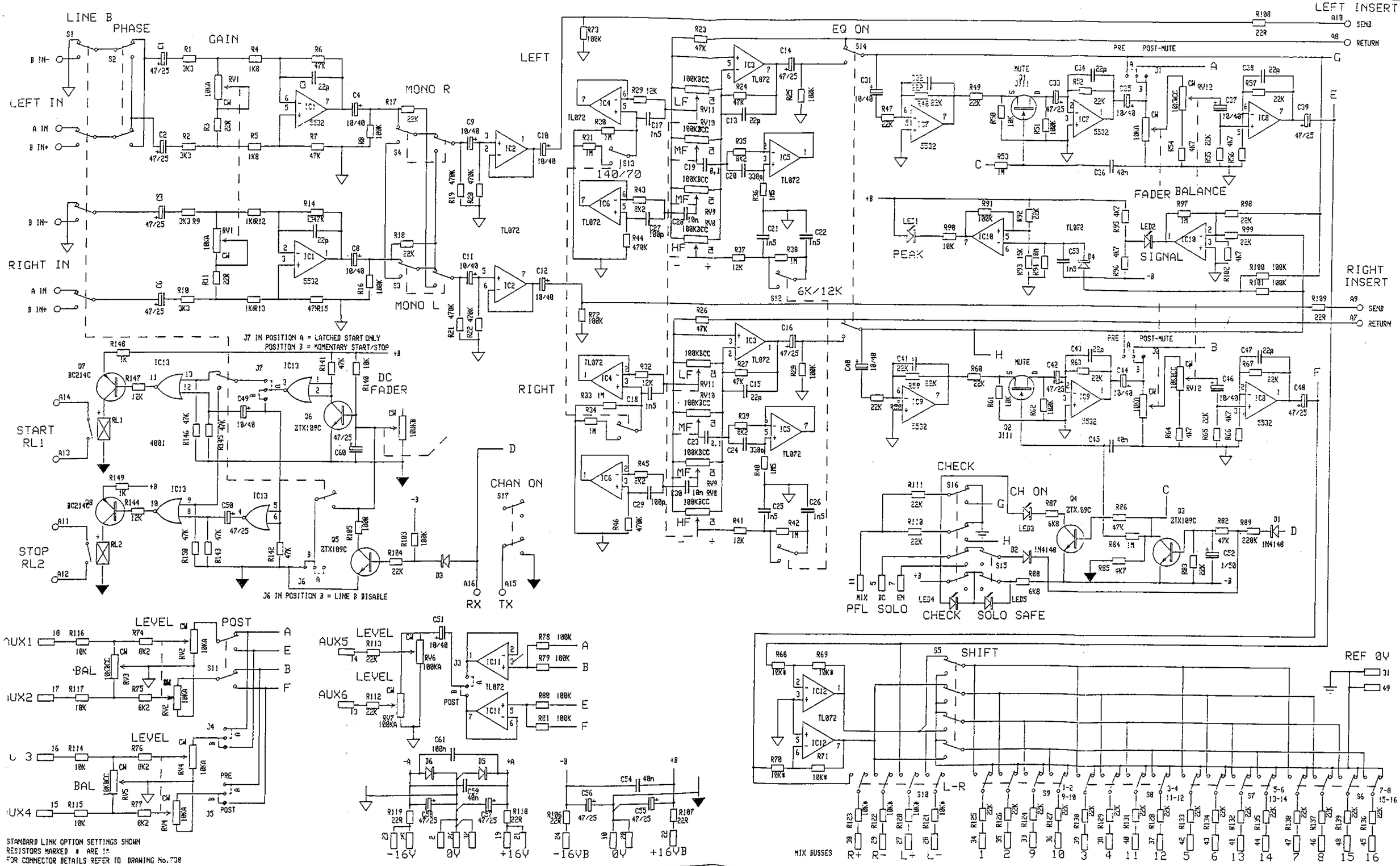

DRAWING No.	BY	DATE
730 ISSUE 2	CD	28-9-89
	IMcB	25-2-91

SABER SERIES
M360 STEREO MODULE AG0211 issue 1

ALLEN & HEATH
KERNICK IND. EST. TEL. 0326 72070
PENRYN FAX. 0326 72070
CORNWALL TR10 9LU

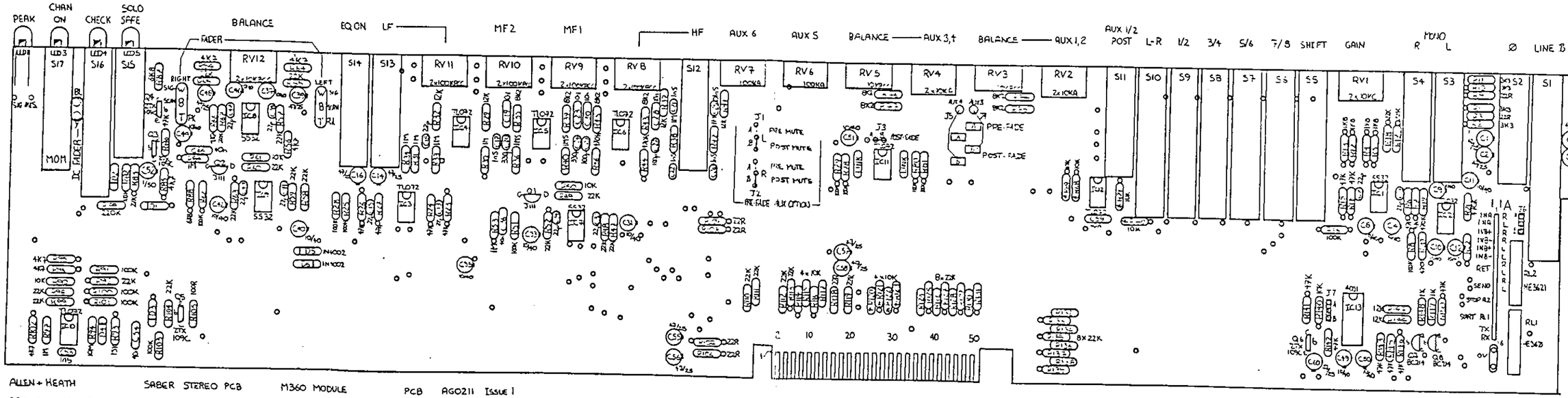

ALLEN + HEATH SABER STEREO PCB M360 MODULE PCB AG0211 ISSUE 1

DRAWING No. BW368

DRAWN BY I M B 12-10-89

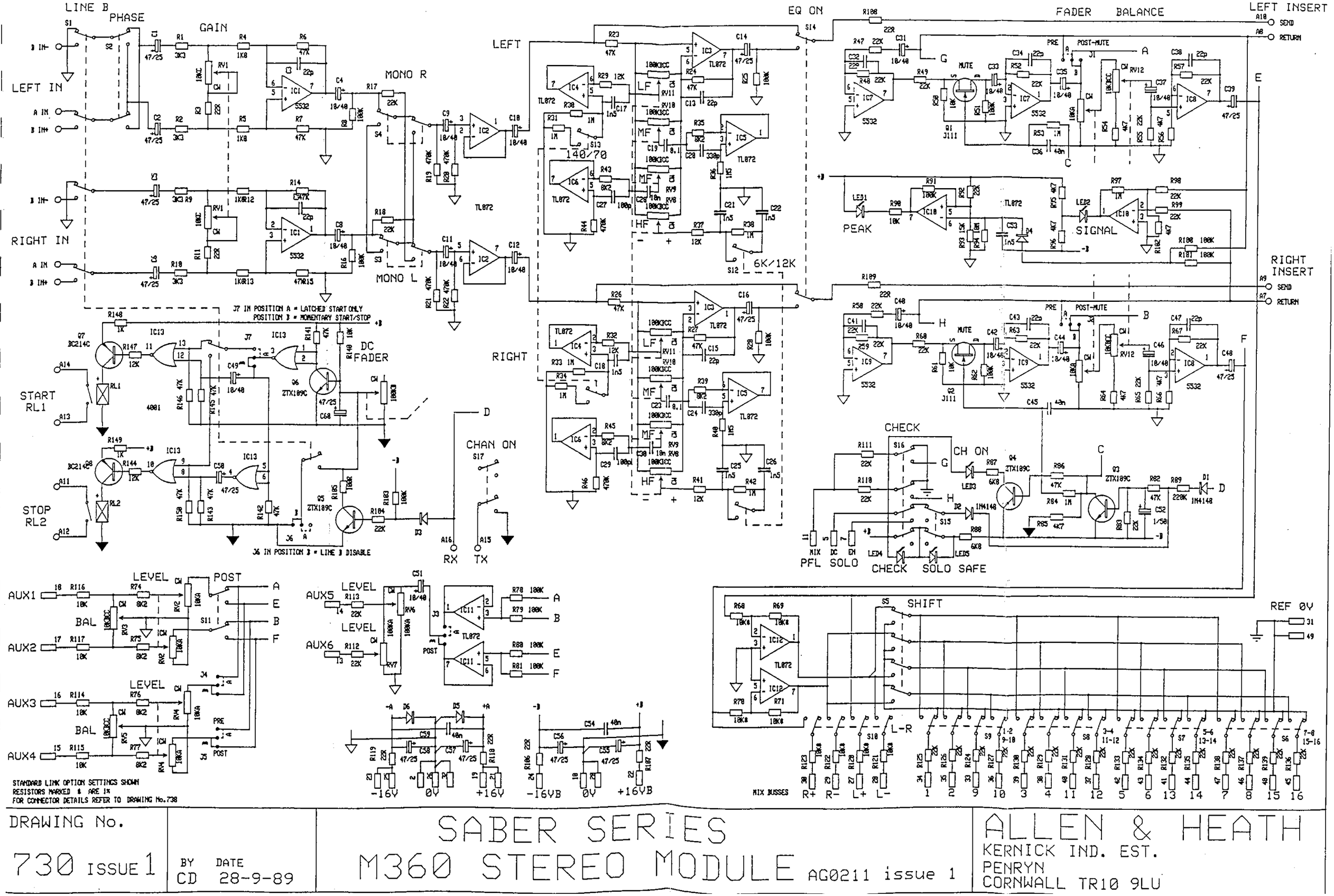

DRAWING No.	BY	DATE
730 ISSUE 1	CD	28-9-89

SABER SERIES
M360 STEREO MODULE AG0211 issue 1

ALLEN & HEATH
KERNICK IND. EST.
PENRYN
CORNWALL TR10 9LU

DRG.No.MBD111

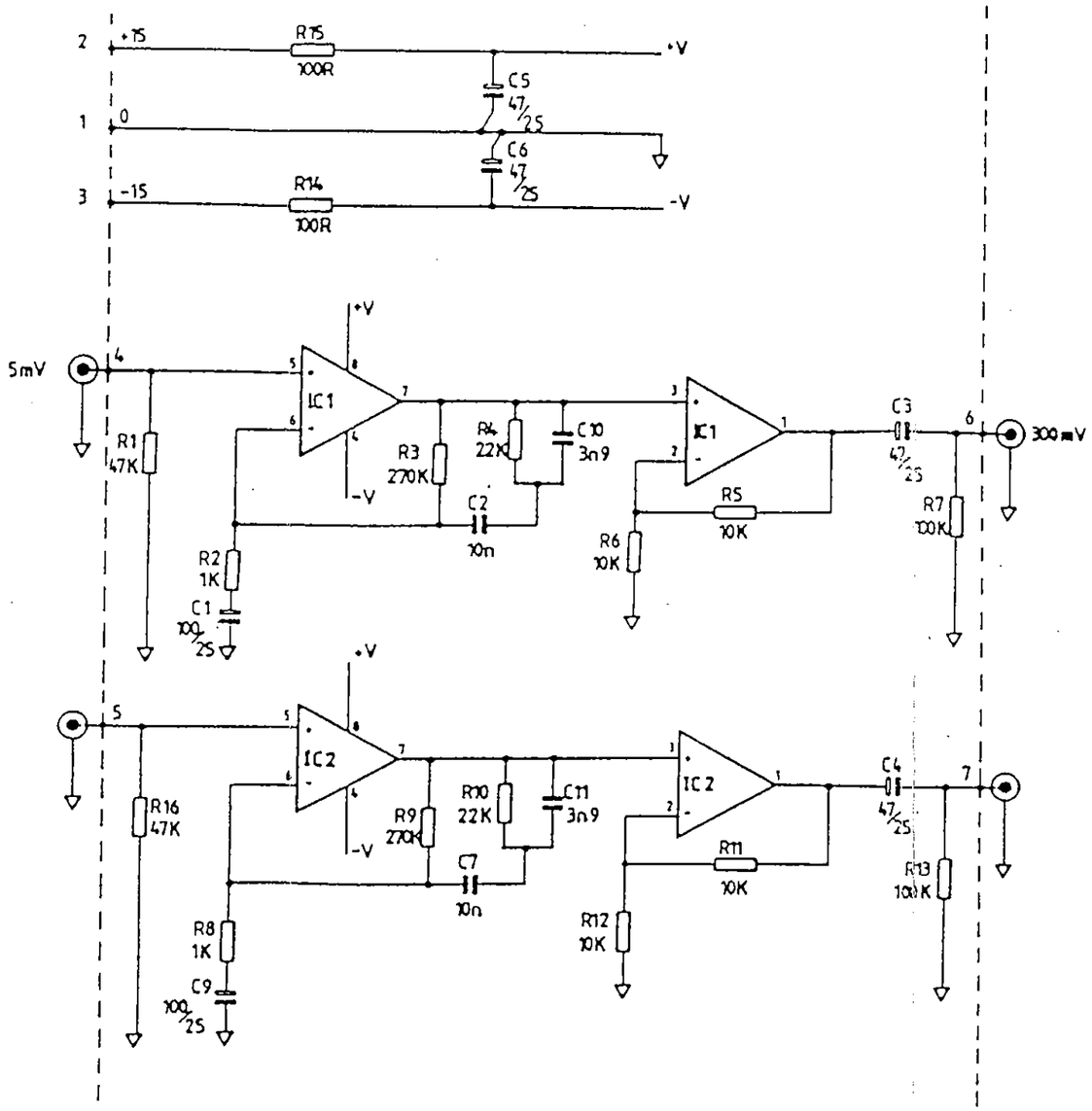

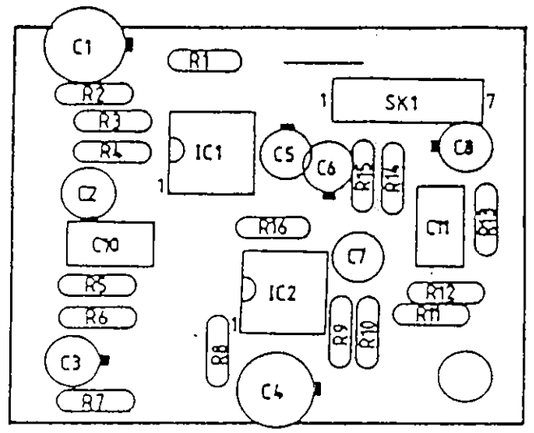

RIAA COMPONENT OVERLAY

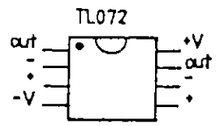

CAPACITORS SHOWN VALUE/VOLTAGE

GMR	ORIGIN			26·2·85
No.	DESCRIPTION	CHK'D	APP'D	DATE

ALTERATIONS

CMC SERIES
RIAA EQUALISED PRE-AMP
RIAA PCB AG0102 iss 1

AIIB
69 SHIP STREET,
BRIGHTON
BN1 1AE

DRAWN	TRACED	CHECKED	APPROVED	DATE	SCALE
GMR	KRP	TR		26·2·85	

DRAWING No. MBD111 iss1

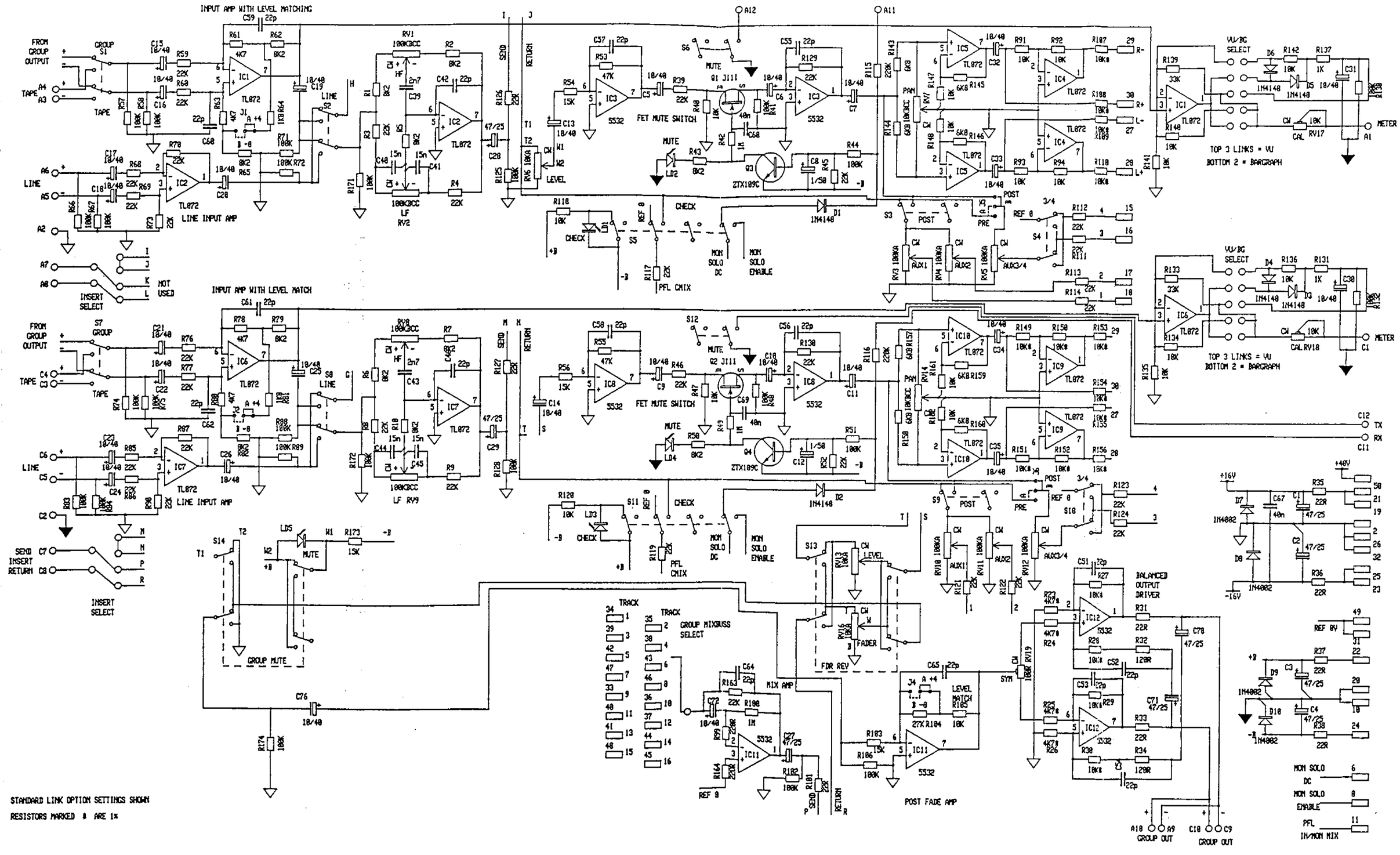

DRAWING No.		
726		SABER SERIES
ISSUE 1	BY GMR DATE 15-8-89	M320 SINGLE GROUP PCB TYPE AG0212 ISSUE 2

ALLEN & HEATH
KERNICK IND. EST.
PENRYN
CORNWALL TR10 9LU

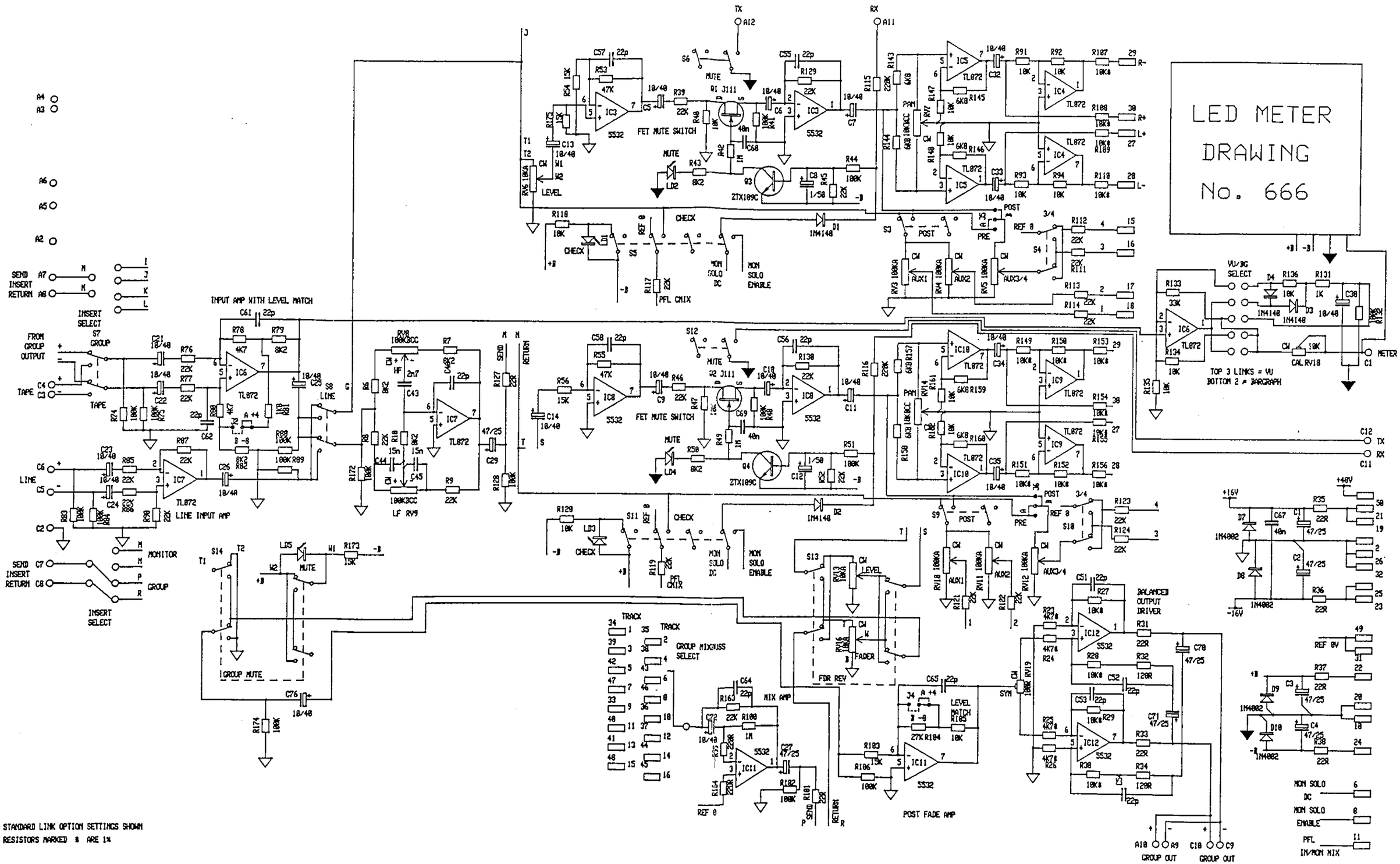

DRAWING No.			
728	BY	DATE	SABER SERIES
ISSUE 1	GMR	22-8-89	M325 PA GROUP

PCB TYPE
AG0212 ISSUE 2

ALLEN & HEATH
KERNICK IND. EST.
PENRYN
CORNWALL TR10 9LU

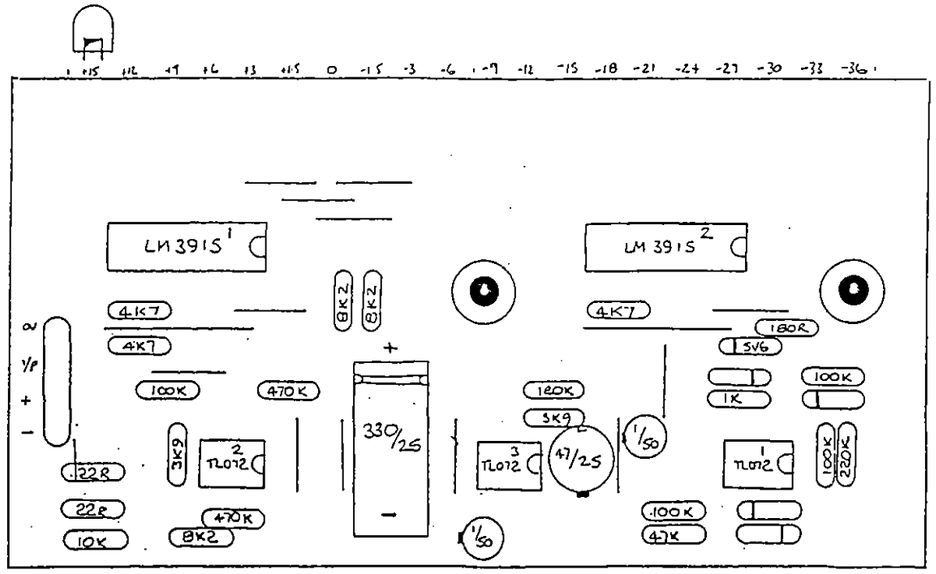

M325 MODULE, METER
PCB. AG0217 Iss 1

DRAWING NO. BW327 Iss 1

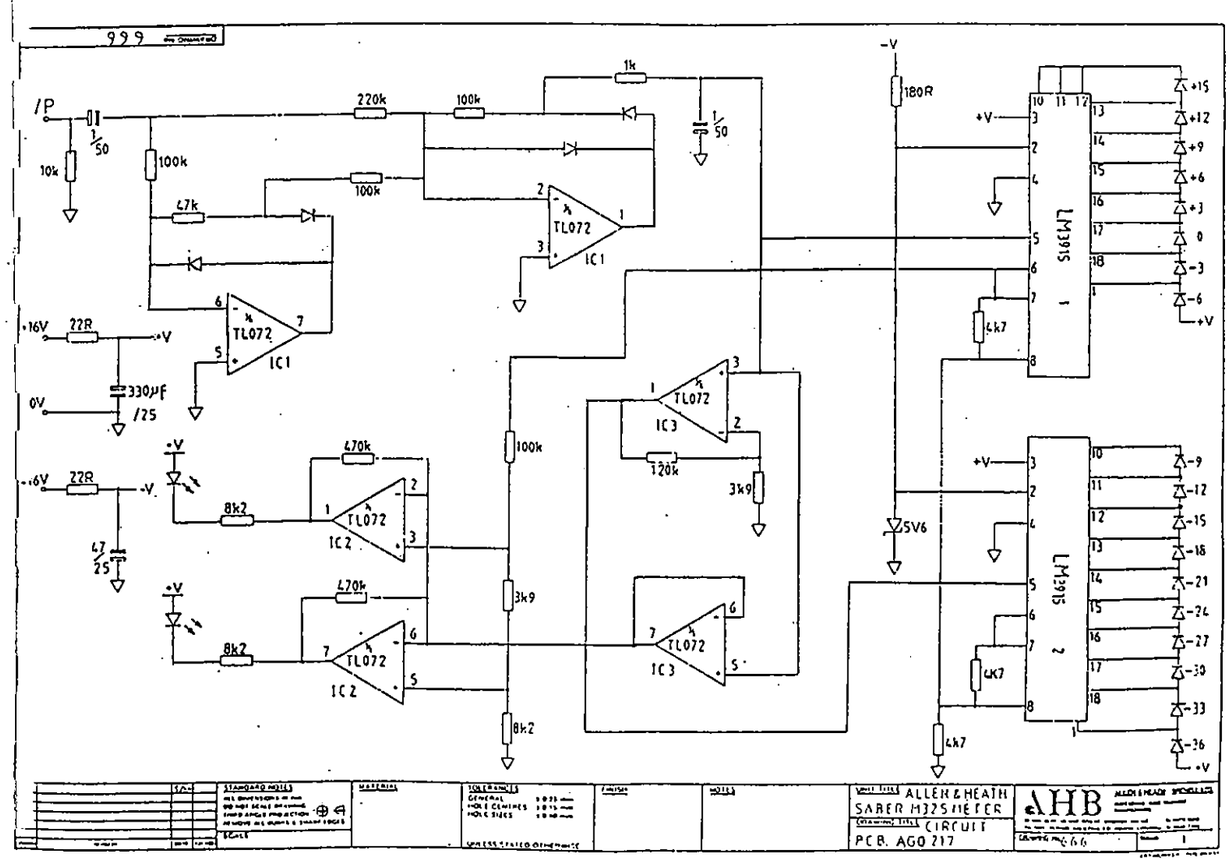

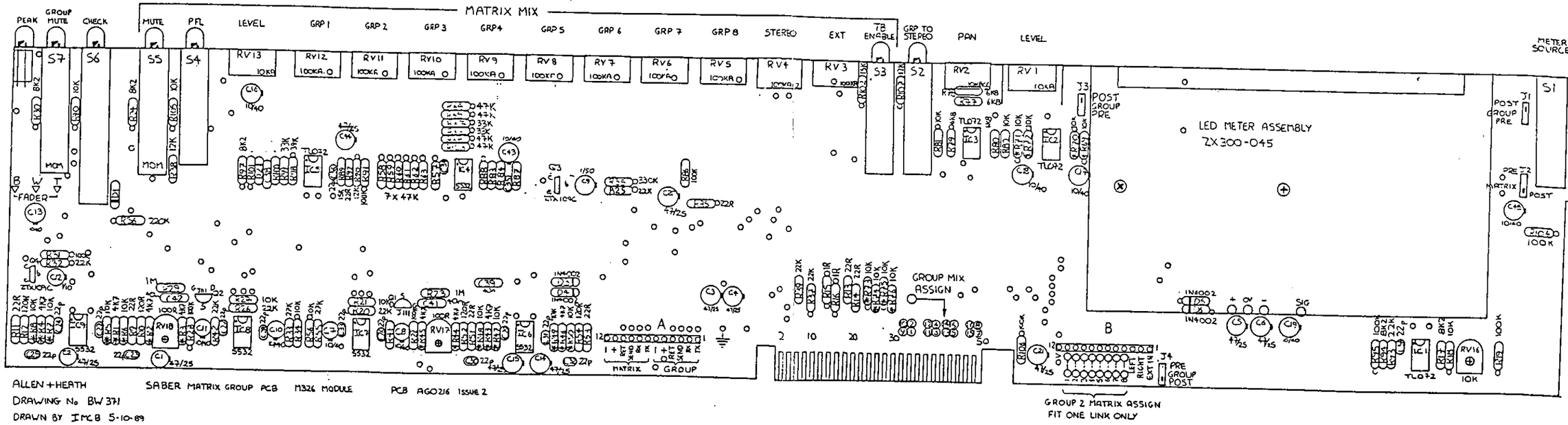

ALLEN + HEATH SABER MATRIX GROUP PCB M326 MODULE PCB AG0216 ISSUE 2

DRAWING No. BW371

DRAWN BY IMCB 5-10-89

20 SEGMENT LED METER DRAWING No. 666

GROUP LINK

TB ENABLE

MATRIX INSERT

RETURN

MATRIX LEVEL

FET MUTE SWITCH

MUTE

SYM

MATRIX OUT

BALANCED OUTPUT DRIVER

GROUP 1

GROUP 2

GROUP 3

GROUP 4

GROUP 5

GROUP 6

GROUP 7

GROUP 8

MATRIX MIX AMP

EXT

STEREO

PRE MUTE

POST MUTE

BUS

GROUP MIXBUS SELECT

MIX AMP

STANDARD LINK OPTION SETTINGS SHOWN

RESISTORS MARKED * ARE 1%

PFL

PFL DC

PFL MIX

REF 0

A PRE J3 B POST

LEVEL

GROUP TO STEREO

BUS DRIVER

METER SOURCE

METER BUFFER

RV16 METER CAL 10K

PFL DC

PFL MIX

PEAK

GROUP PEAK

GROUP FADER

CHECK

MON SOLO DC

MON SOLO ENABLE

GROUP INSERT

GROUP OUT

REF 0

MON SOLO DC

MON SOLO ENABLE

PFL MIX

DRAWING No.	BY	DATE
729 ISSUE 1	GMR	23-8-89

SABER SERIES

M326 MATRIX GROUP

PCB TYPE AG0216 ISSUE 2

ALLEN & HEATH
KERNICK IND. EST.
PENRYN
CORNWALL TR10 9LU

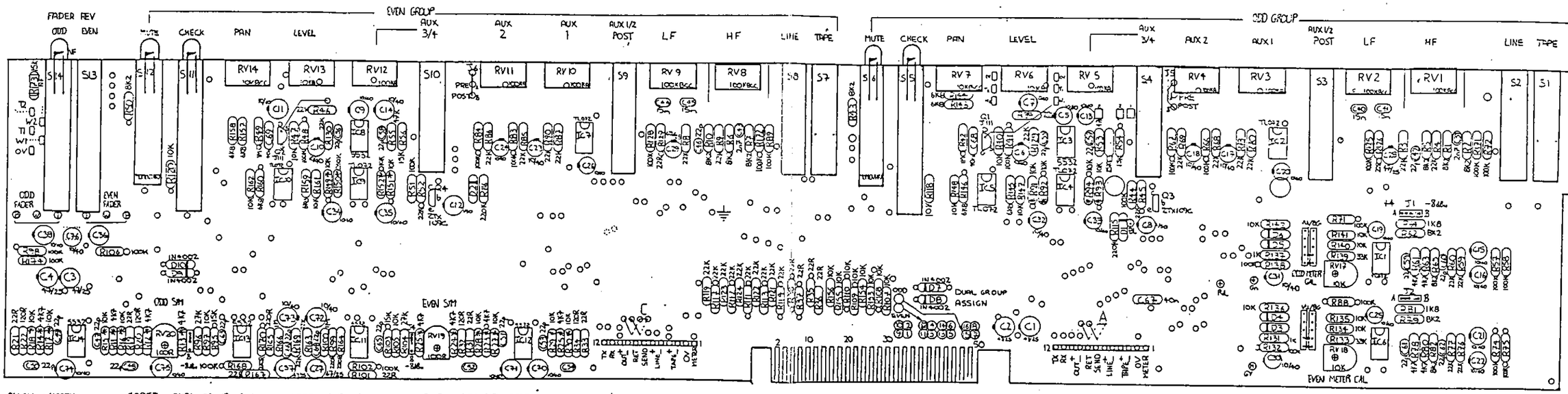

ALLEN + HEATH SABER DUAL GROUP PCB M330 MODULE PCB AGO 212 ISSUE 2

DRAWING No. BW 359-30

DRAWN BY I PCB 11-10-89

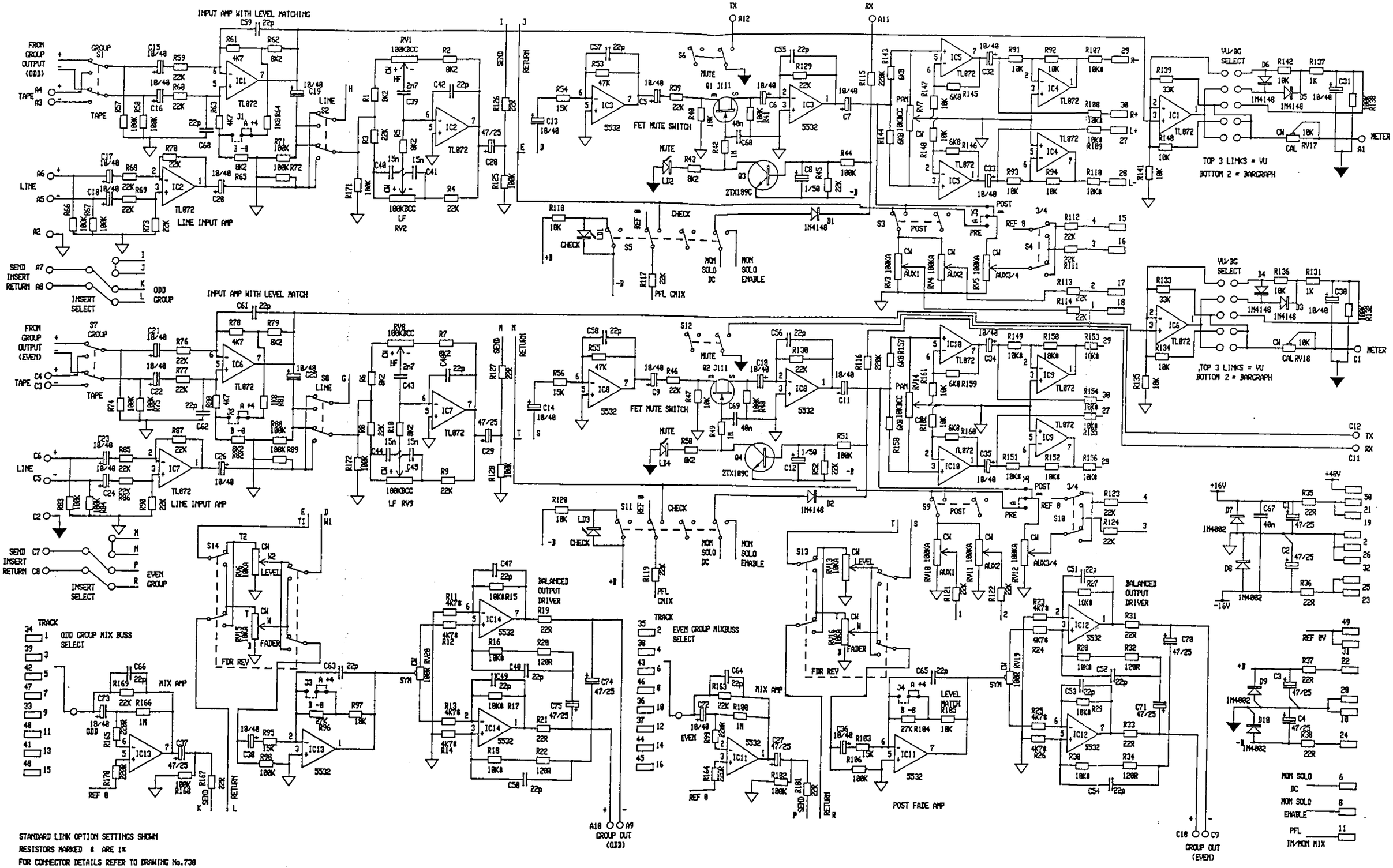

DRAWING No.
725
ISSUE 1

BY GMR DATE 15-8-89

SABER SERIES
M330 DUAL GROUP

PCB TYPE
AG0212 ISSUE 2

ALLEN & HEATH
KERNICK IND. EST.
PENRYN
CORNWALL TR10 9LU

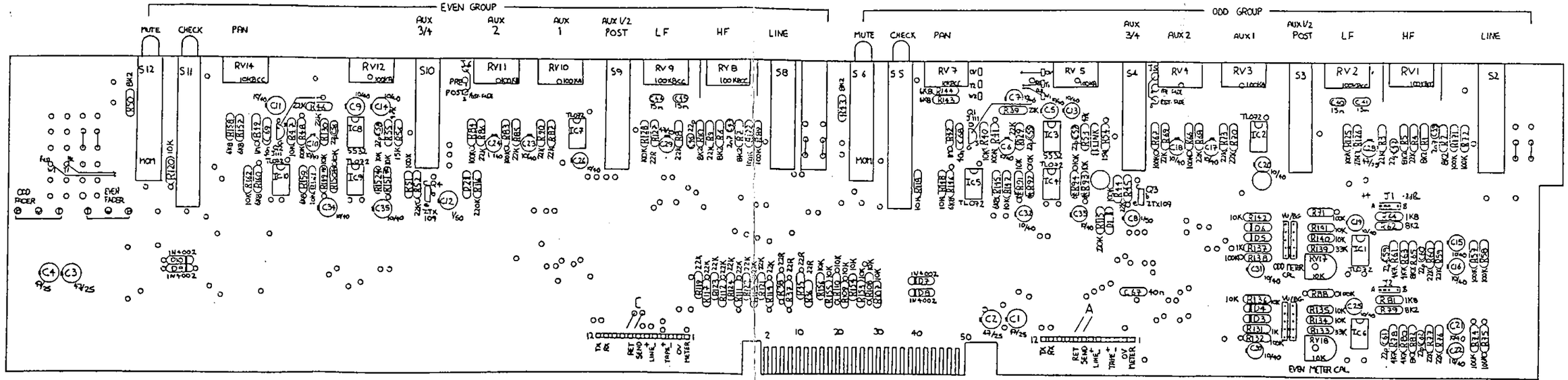

ALLEN + HEATH SABER DUAL MONITOR PCB M335 MODULE PCB AGO 212 ISSUE 2
DRAWING No BW 359-35
DRAWN BY I MCB 13-10-89

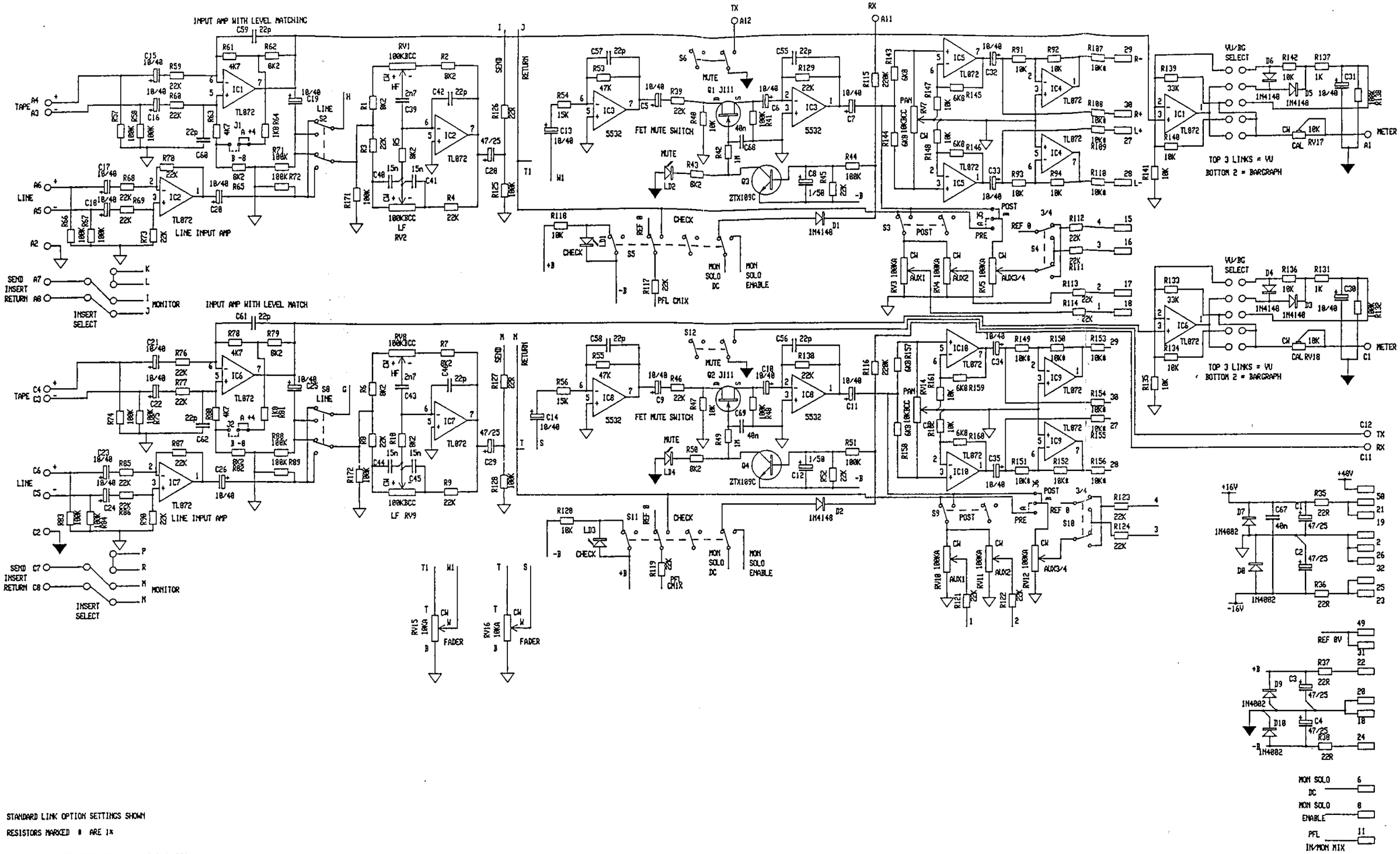

STANDARD LINK OPTION SETTINGS SHOWN

RESISTORS MARKED * ARE 1%

FOR CONNECTOR DETAILS REFER TO DRAWING No.738

DRAWING No.	BY	DATE		
727	GMR	21-8-89	SABER SERIES M335 DUAL MONITOR	PCB TYPE AG0212 ISSUE 2
ISSUE 1				

ALLEN & HEATH
KERNICK IND. EST.
PENRYN
CORNWALL TR10 9LU

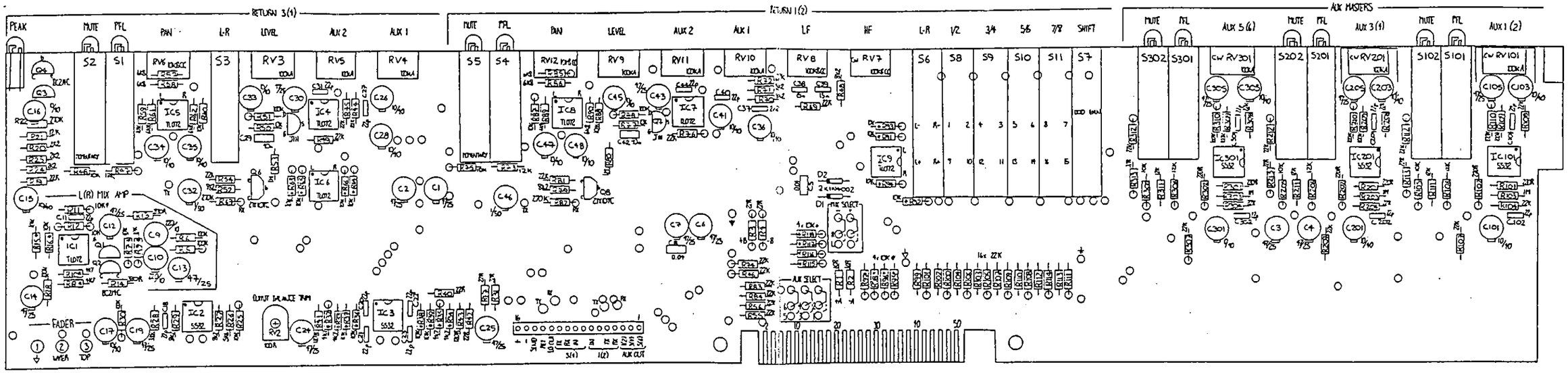

ALLEN + HEATH SABER L-R PCB PART OF M550 + M555 MODULES PCB AG0213 ISSUE 2

DRAWING NO BW356

DRAWN BY CD 18 8 87

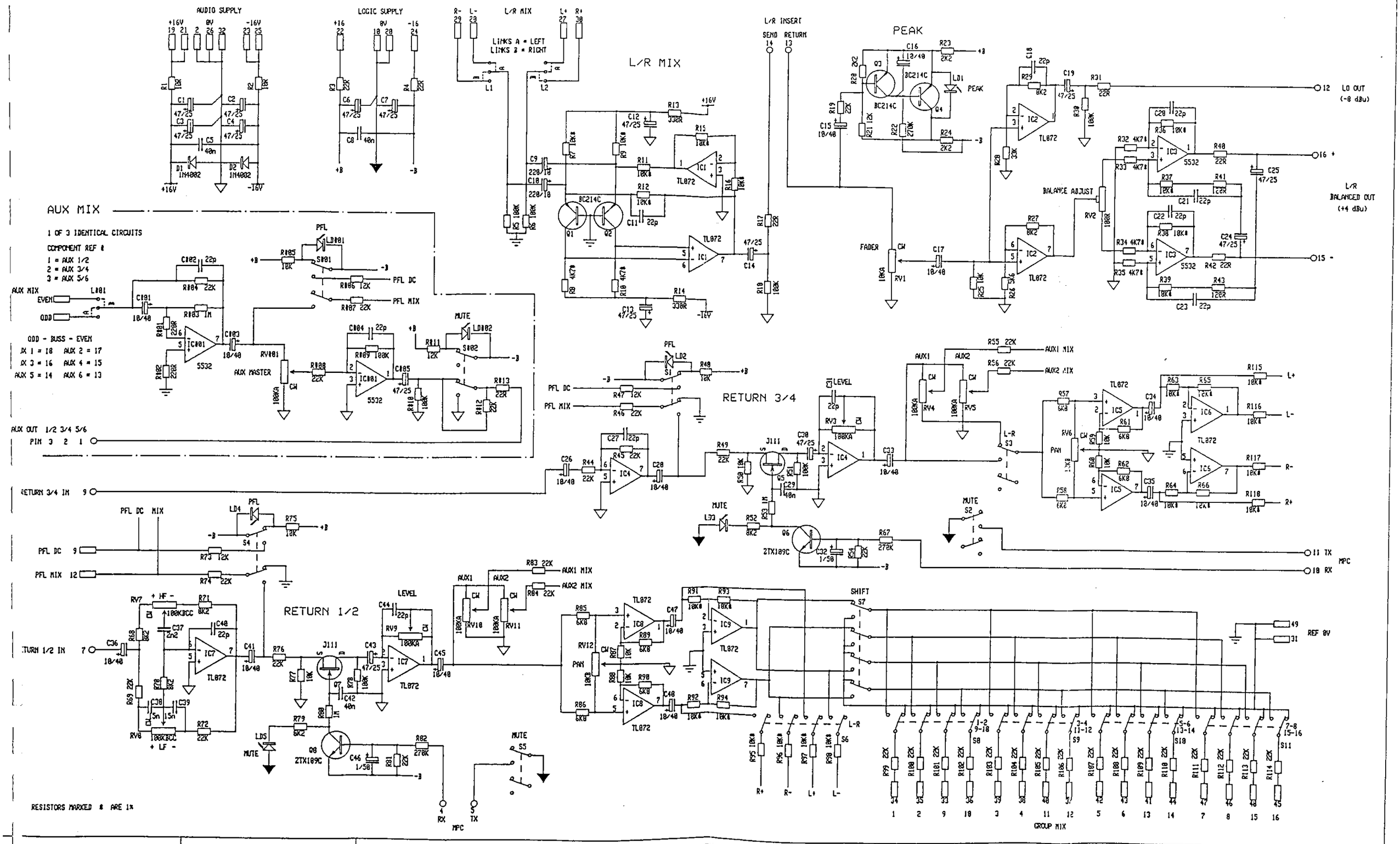

DRAWING No.	BY DATE	SABER SERIES L/R MASTER	PCB TYPE AG0213 issue 2	ALLEN & HEATH
724 ISSUE 1	CD 10-8-89	PART OF M350/5 MODULE		KERNICK IND. EST. PENRYN CORNWALL TR10 9LU

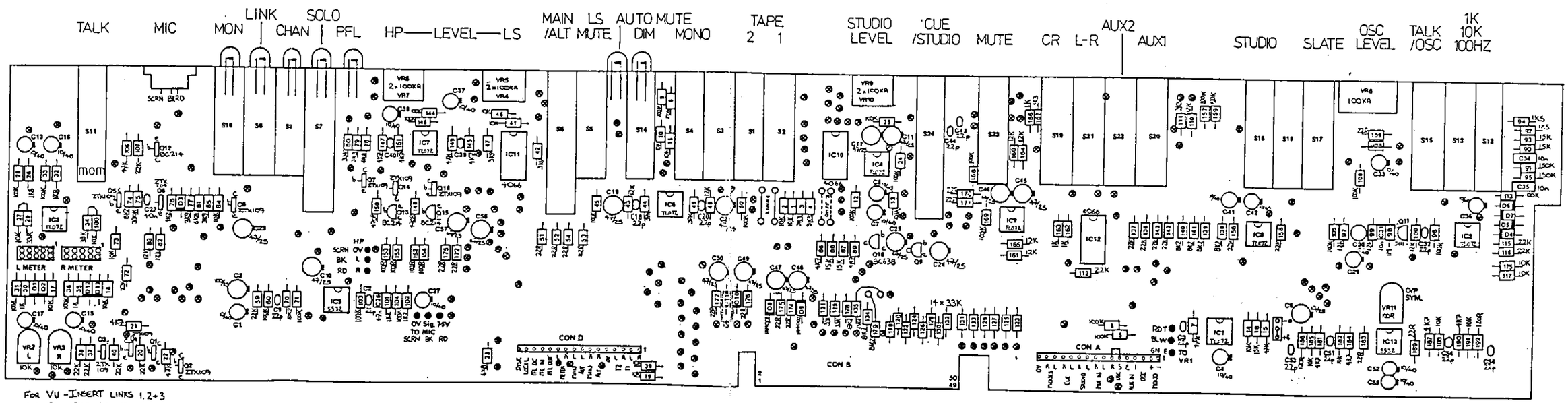

ALLEN & HEATH
SABER M350 MONO
PCB AG 0214 iss 1
DRAWING No BW 362 DRAWN

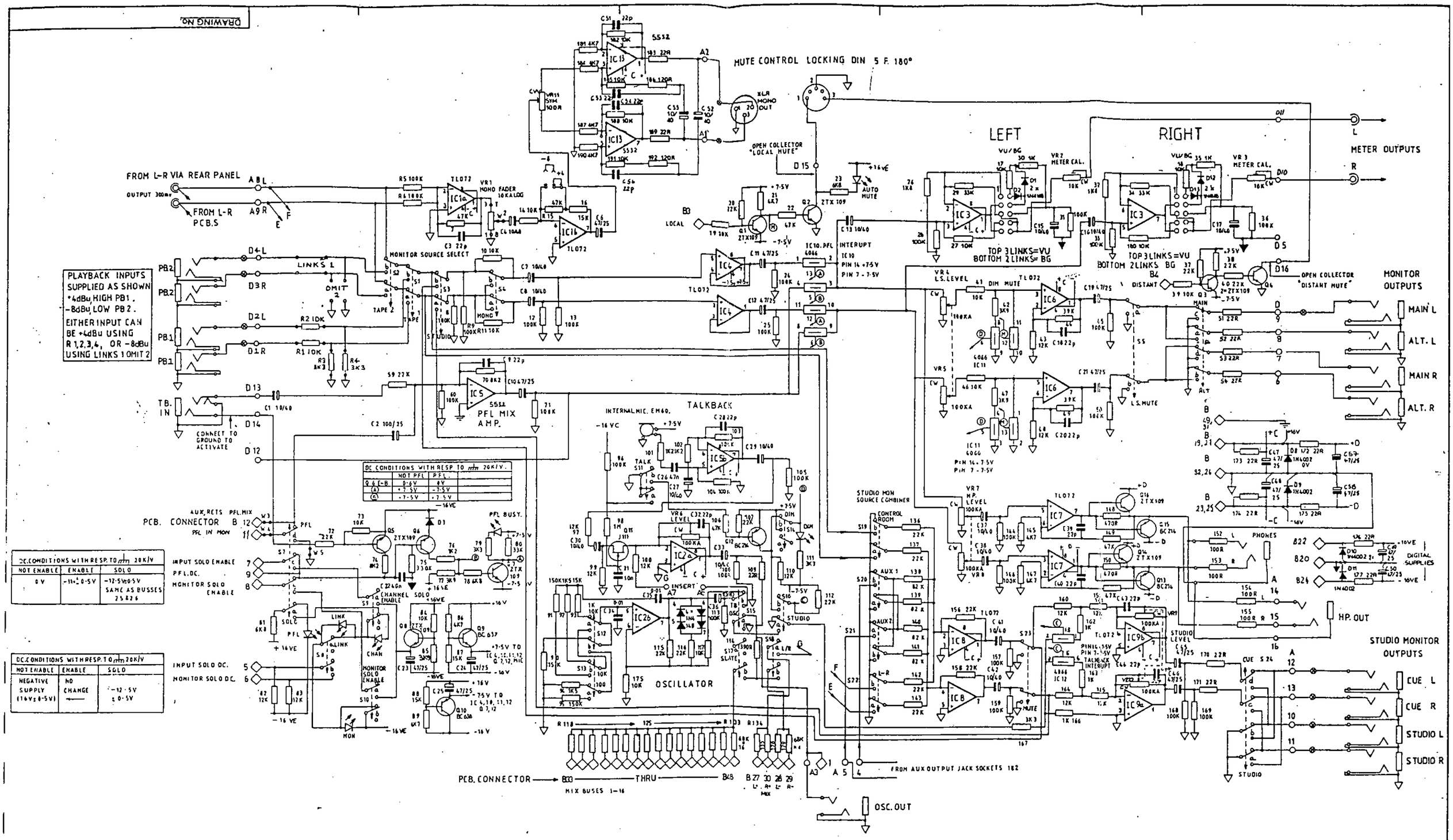

DC CONDITIONS WITH RESP TO ⏚ 20K/V.		
	NOT PFL	PFL
Q 6 E-B	0·6V	0V
(A)	+7·5V	-7·5V
(B)	+7·5V	+7·5V

DC CONDITIONS WITH RESP. TO ⏚ 20K/V		
NOT ENABLE	ENABLE	SOLO
0V	-11V±0·5V	-12·5V±0·5V SAME AS BUSSES 25&26

DC CONDITIONS WITH RESP. TO ⏚ 20K/V		
NOT ENABLE	ENABLE	SOLO
NEGATIVE SUPPLY (16V±0·5V)	NO CHANGE ←	-12·5V ±0·5V

ALL OP-AMPS TL072

REFS	HIGHEST	MISSING
R	192	55-58
C	55	

E.J	PLAYBACK INPUTS CORRECTED	1-7-91	
MB			10-10-89
RDC	PCB REVISION	6-6-89	
E J	PRODUCTION	18-1-89	
GMB	ORIGIN	15-9-89	
	REVISION	DATE	CHECKED

STANDARD NOTES
ALL DIMENSIONS IN mm
DO NOT SCALE DRAWING
THIRD ANGLE PROJECTION
REMOVE ALL BURRS & SHARP EDGES

SCALE

MATERIAL

TOLERANCES
GENERAL ±0.25 mm
HOLE CENTRES ±0.15 mm
HOLE SIZES ±0.10 mm
UNLESS STATED OTHERWISE

FINISH

NOTES
OPTIONAL PATCHBAY INTERFACE
REFER TO COMPONENT REFERENCE SHEET
(M) AUTOMUTE DC CONTROL LINE FROM Q1. TO IC11

UNIT TITLE
ALLEN & HEATH SABER
M 350 MODULE MONITOR PCB.

DRAWING TITLE
CIRCUIT DIAGRAM PCB. AG 0214 ISS 1

AHB
ALLEN & HEATH BRENELL LTD.
PROFESSIONAL AUDIO EQUIPMENT MANUFACTURERS
DESIGN DEPT 98 SHIP STREET, BRIGHTON BN1 1AE Tel (0273) 24828
FACTORY KERNICK INDUSTRIAL EST PENRYN CORNWALL Tel (0326) 72070

DRAWING No. 731
ISSUE 1

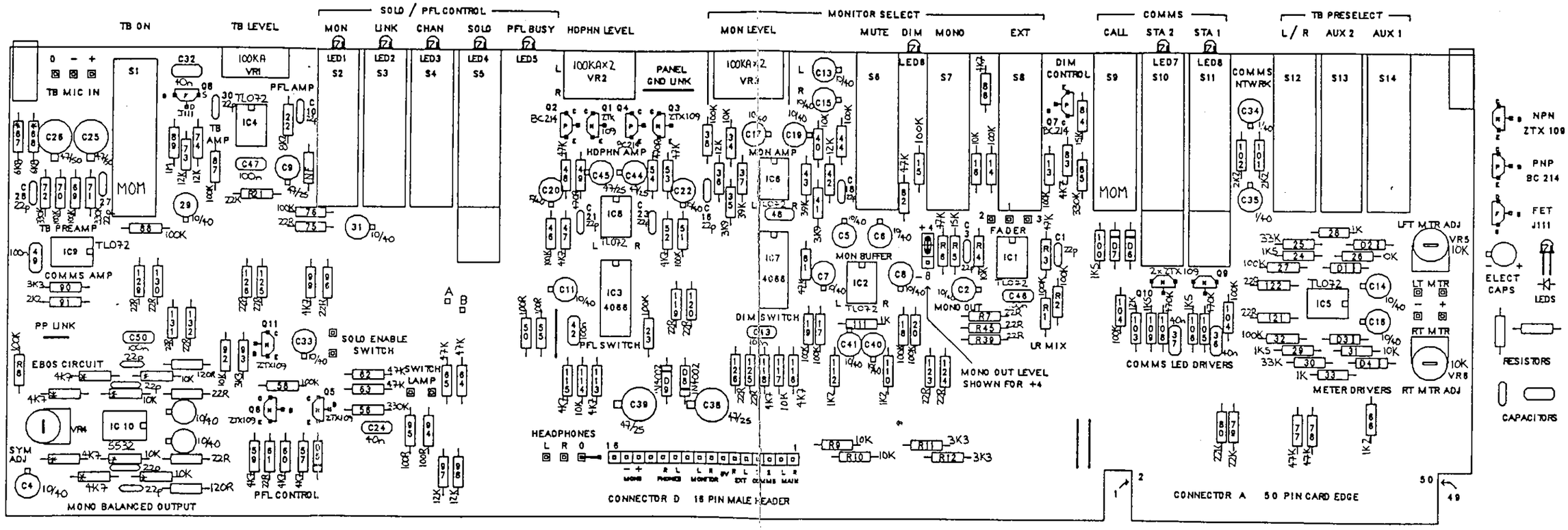

ALLEN & HEATH SABER PA MONITOR PCB AG0215 ISSUE 1 PARTS PLACEMENT DIAGRAM

DRAWING No BW 365

AUG-89 JRP

DRAWING No.

MONO SUMMER

MONO OUTPUT LEVEL

MONO BALANCED OUT

-10 LEVEL FROM REAR PANEL RCA CONNECTORS

MONO FADER

PFL CMOS SWITCHES

LEFT METER

LEFT METER TRIM

RIGHT METER

RIGHT METER TRIM

MONITOR LEVEL

MONITOR MUTE

DIM CMOS SWITCHES

MONITOR OUT

HDPHN LEVEL

HDPHN

HDPHN REAR PANEL

GND P

EXTERNAL INPUT

LEFT

RIGHT

EXT

MONO

MON BUFF AMPS

LEFT MONITOR AUDIO

RIGHT MONITOR AUDIO

POWER DISTRIBUTION

+VB	A22	+16V B	
AUX GND	A20	0VOLTS B	
-VB	A14	-16V B	
+VA	A19	+16V A	
AUDIO GND	A26	0VOLTS A	
	A32	0VOLTS A	
-VA	A23	-16V A	
	A25	-16V A	

INDIVIDUAL DECOUPLING

PP LINK

TALKBACK MIC IN

TO DIM CMOS SWITCHES

DIM CONTROL

TO PFL MIX AMP

COMMS RECEIVE AMP

TB LEVEL

TB PRE-SELECTS

L/R

AUX 1

AUX 2

A27 +LEFT MIX BUS

A30 +RIGHT MIX BUS

A18 AUX 1 MIX BUS

A17 AUX 2 MIX BUS

A49 REF GND

A1 TB AUDIO

TALK

CALL

STA 1

STA 2

FOR CONNECTION TO CLEARCOM™ TYPE INTERCOM SYSTEMS. -SABER ACTS AS SLAVE-

COMMS 1 IN

COMMS 1 OUT

COMMS 2 IN

COMMS 2 OUT

COMMS 1 CALL LED

COMMS 2 CALL LED

TO PFL DC

FROM COMMS RECEIVE AMP

PFL

PFL BUS-AUX/RTN

PFL BUS-IN/MON

AUDIO GND

PFL MIX AMP

PFL CONTROL

MON SOLO ENABLE

PFL DC

CHAN SOLO ENABLE

A & B TO PFL CMOS SWITCHES

PFL BUSY LEDS

SOLO

PFL LED4

LED2

LED1

LED3

MON SOLO DC

CHAN SOLO DC

LINK

CHAN ENABLE

MON ENABLE

SWITCH LAMP

MASTER SOLO ENABLE (FRONT PANEL)

SOLO CONTROL

CONNECTOR "A" 50 WAY CARD EDGE

PIN	TRACK SIDE	PIN	COMP SIDE
49	0V REF	50	+48V
47	MIX 7	48	MIX 15
45	16	46	8
43	6	44	14
41	13	42	5
39	3	40	11
37	12	38	4
35	2	36	10
33	9	34	1
31	0V REF	32	0V A
29	MIX -R	30	MIX +R
27	MIX +L	28	MIX -L
25	-15V A	26	0V A
23	-16V A	24	-16V B
21	+16V A	22	+16V B
19	+16V A	20	0V B
17	AUX MIX 2	18	AUX MIX 1
15	4	16	3
13	6	14	5
11	PFL-IN/MON	12	PFL-AUX/RTN
9	PFL DC	10	0V B
7	IN SOLO EN	8	MON SOLO EN
5	IN SOLO DC	6	MON SOLO DC
3	LOCAL	4	DISTANT
1	TB AUDIO	2	0V A

CONNECTOR "D" 16 WAY M HEADER

16	HDPHN GND
15	MONO OUT +
14	MONO OUT -
13	NC
12	HDPHN R
11	HDPHN L
10	0V
9	MONITOR L
8	MONITOR R
7	0V
6	EXT IN R
5	EXT IN L
4	COMMS 1
3	COMMS 2
2	LEFT IN
1	RIGHT IN

DATE	REVISION / COMMENTS	DRWN	CHED	LAST USED	NOT USED	DEFAULTS - UNLESS NOTED
				R132		ALL OPAMPS TL072 OR LF353
				C58		ALL DIODES 1N4148 OR 1N914
				D9		ALL ELECT CAPS SHOWN VALUE/VOLTS
				YR6		ALL SWITCHES SHOWN DESELECTED
				IC10		ALL RESISTORS 1/4W CARBON FILM 5%
				LED6		LED COLOURS SHOWN AS R, G, Y
22-8-89	ORIGINAL	JPP	JRP	S14		NPN TRANSISTORS=ZTX-109, PNP=BC214

CONNECTOR LEGENDS

- 50 WAY CARD EDGE TO MAIN BUSES
- 16 WAY MALE HEADER TO REAR PANEL
- INTRA-PCB CONNECTION
- WIRING PAD

IC, TRIMMER & CONNECTOR LOCATIONS

UNIT TITLE: ALLEN & HEATH SABER M35S P.A. MONITOR PCB

DRAWING TITLE: CIRCUIT DIAGRAM PCB AG0215 ISSUE 1

ALLEN & HEATH
PROFESSIONAL AUDIO EQUIPMENT MANUFACTURERS

DRAWING No. 732

ISSUE 1

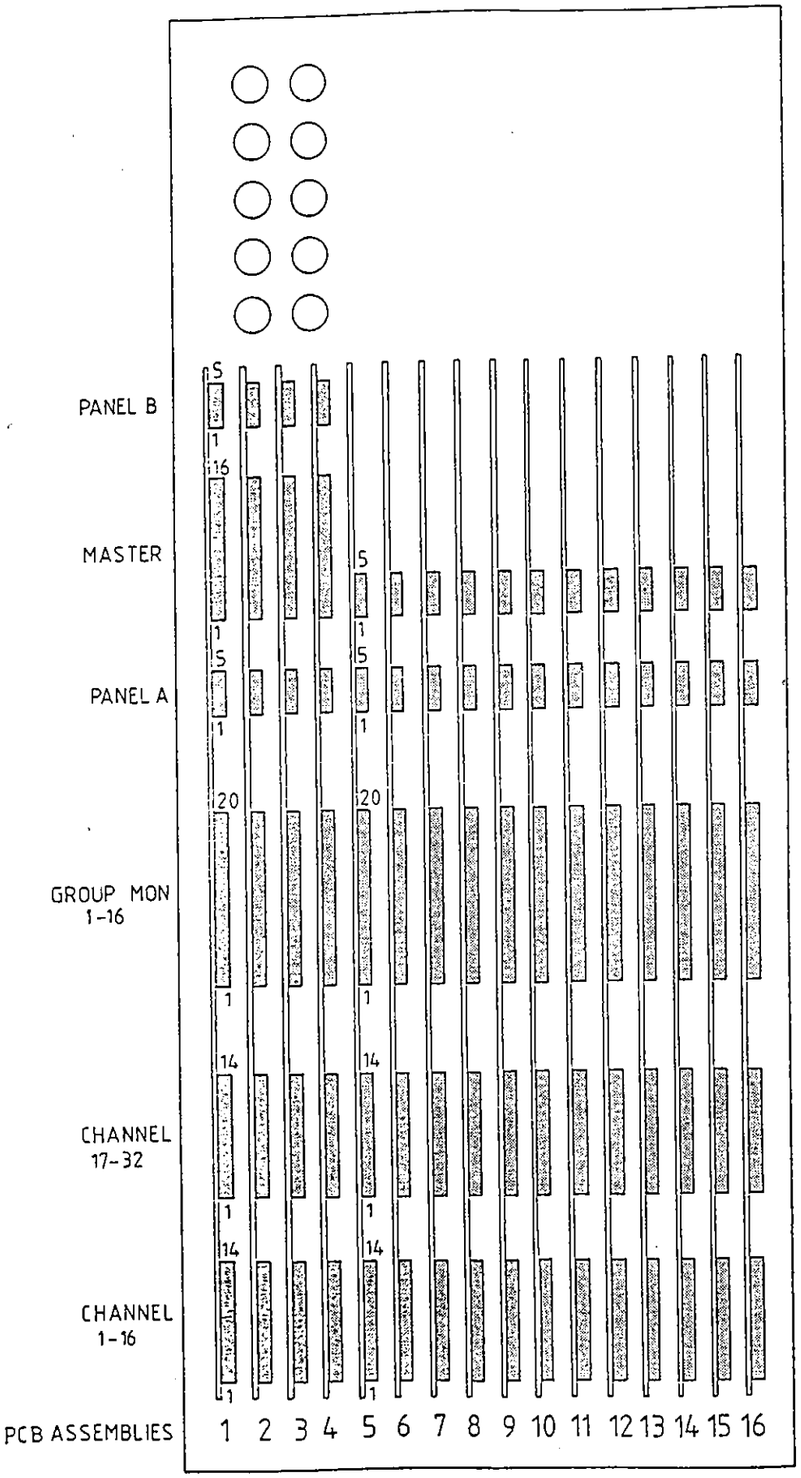

INTERNAL VIEW

SABER PATCHBAY ASSEMBLY M390 16 TRACK 32 CHANNEL

DRAWING NO. 702 ISS. 1.

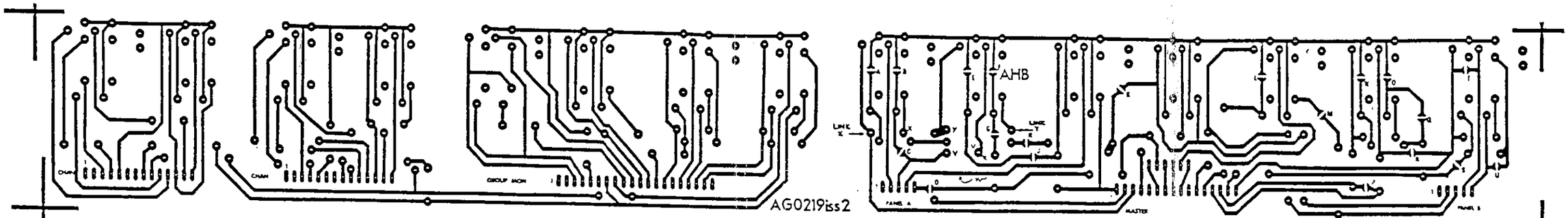

SABER PATCHBAY PCB. ASSEMBLY LINK VARIATIONS SHOWN THUS ⊣⊢ DRAWING NO. 703

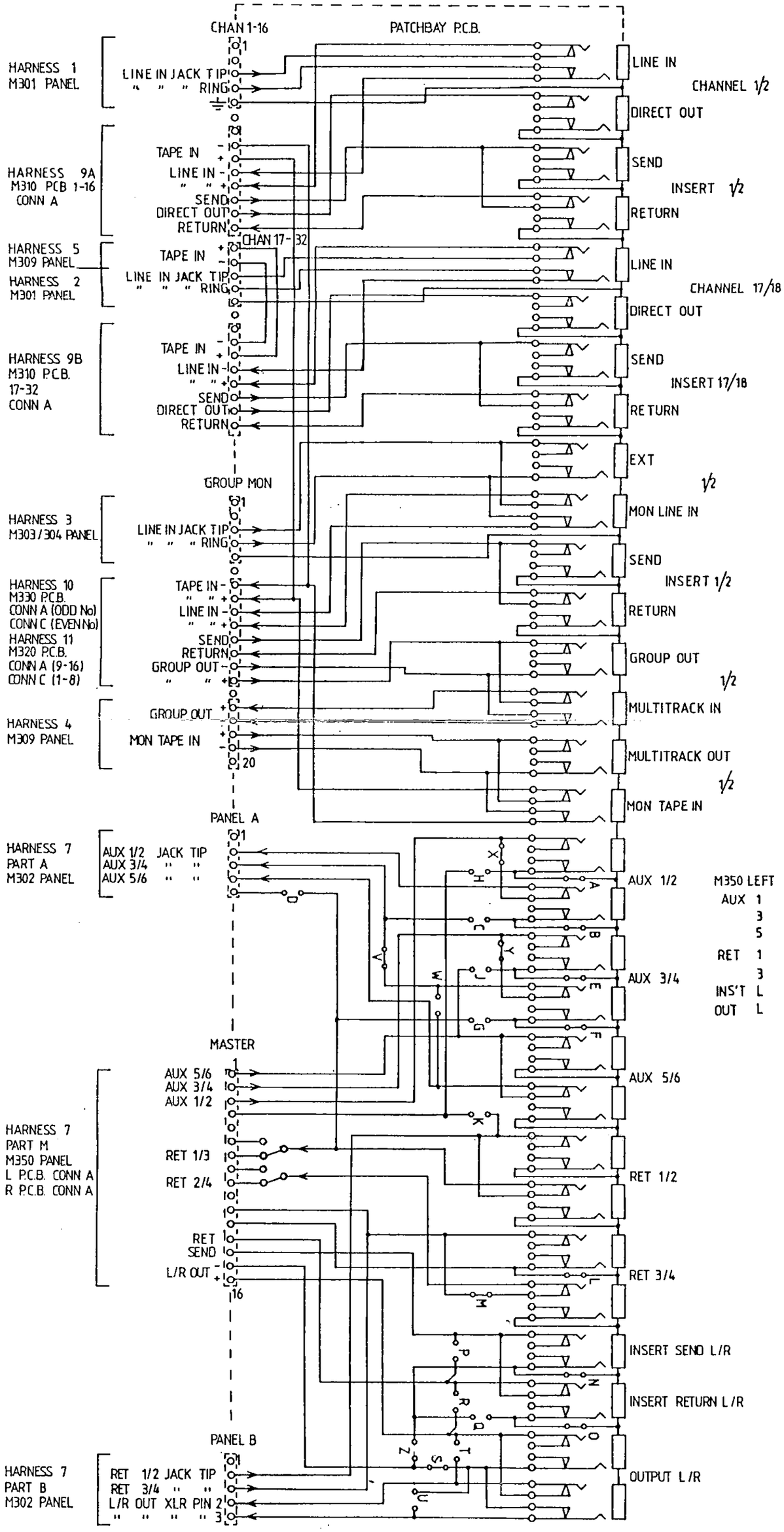

DRAWING No. 681

STANDARD NOTES
ALL DIMENSIONS IN mm
DO NOT SCALE DRAWING
THIRD ANGLE PROJECTION
REMOVE ALL BURRS & SHARP EDGES

MATERIAL

TOLERANCES
GENERAL ±0.25 mm
HOLE CENTRES ±0.15 mm
HOLE SIZES ±0.10 mm
UNLESS STATED OTHERWISE

FINISH

NOTES
PCB BOARD REF No AGO219 iss 2
BOARD TYPE 1 FOR CH 1/17 AND L
TYPE 2 FOR CH 2/18 AND R

UNIT TITLE
SABER SERIES

DRAWING TITLE
PATCHBAY BOARD CIRCUIT

DRAWING No. 681

ISSUE 1

AHB
ALLEN & HEATH BROADCAST LTD
PROFESSIONAL AUDIO EQUIPMENT MANUFACTURERS

DRAWING No. 682

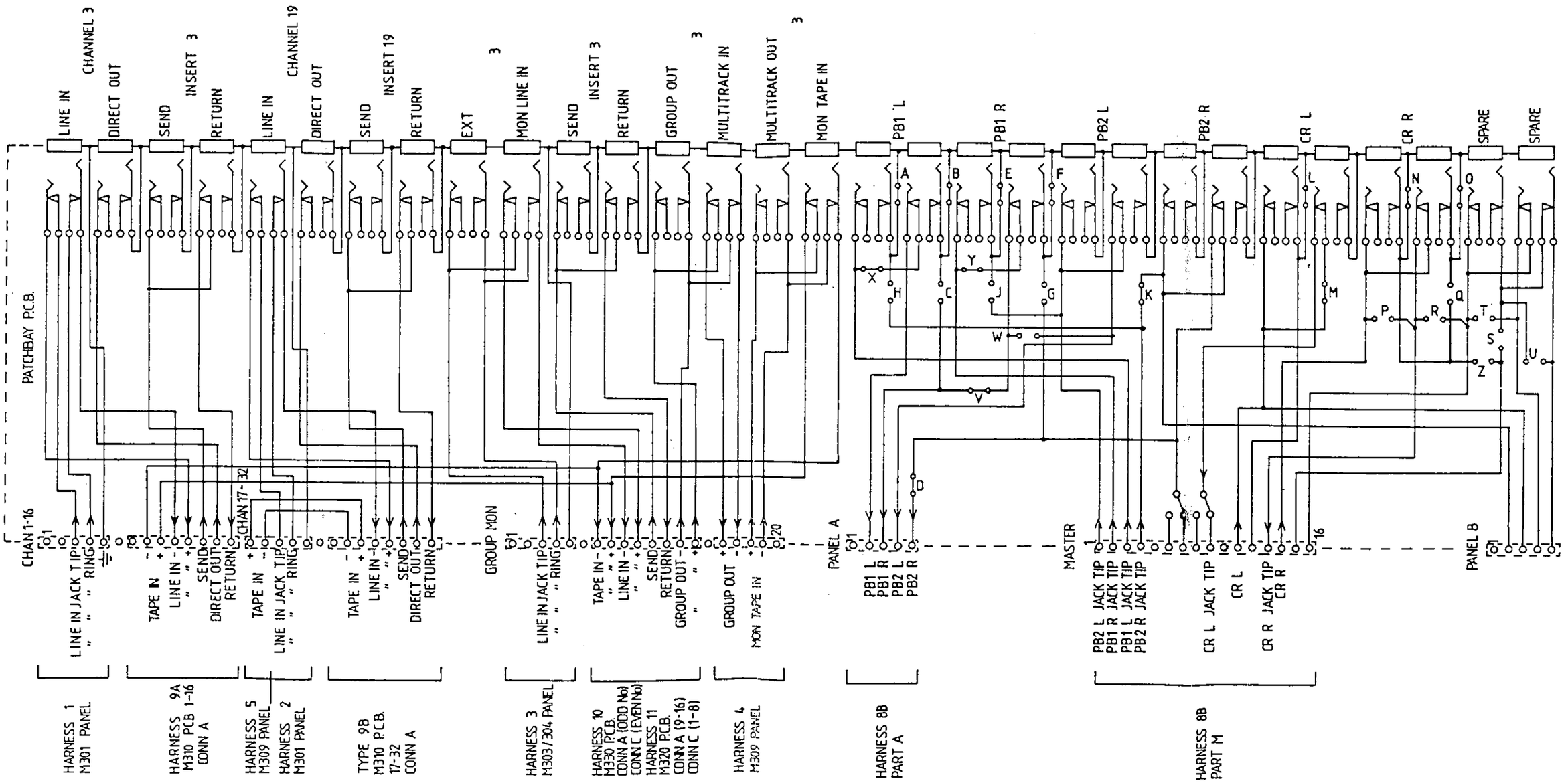

KRP	CHANGED HARNESS 8B PARTS A+M LEGEND	16-3-88	
JoN	ORIGIN	10-7-88	
DRAWN	REVISION	DATE	CHECKED

STANDARD NOTES
ALL DIMENSIONS IN mm
DO NOT SCALE DRAWING
THIRD ANGLE PROJECTION
REMOVE ALL BURRS & SHARP EDGES
SCALE

MATERIAL

TOLERANCES
GENERAL ±0.25 mm
HOLE CENTRES ±0.15 mm
HOLE SIZES ±0.10 mm
UNLESS STATED OTHERWISE

FINISH

NOTES
PCB BOARD REF No AG0219 iss 2
BOARD TYPE 3
FOR CH3/19 AND M350 MONITOR

UNIT TITLE
SABER SERIES

DRAWING TITLE
PATCHBAY BOARD CIRCUIT

AHB
ALLEN & HEATH BRENELL LTD
PROFESSIONAL AUDIO EQUIPMENT MANUFACTURERS
'DESIGN DEPT' 69 SHIP STREET, BRIGHTON BN1 1AE Tel 0273 24928
'FACTORY' KERNICK INDUSTRIAL EST, PENRYN CORNWALL Tel 0326 74070

DRAWING No. 682
ISSUE 2

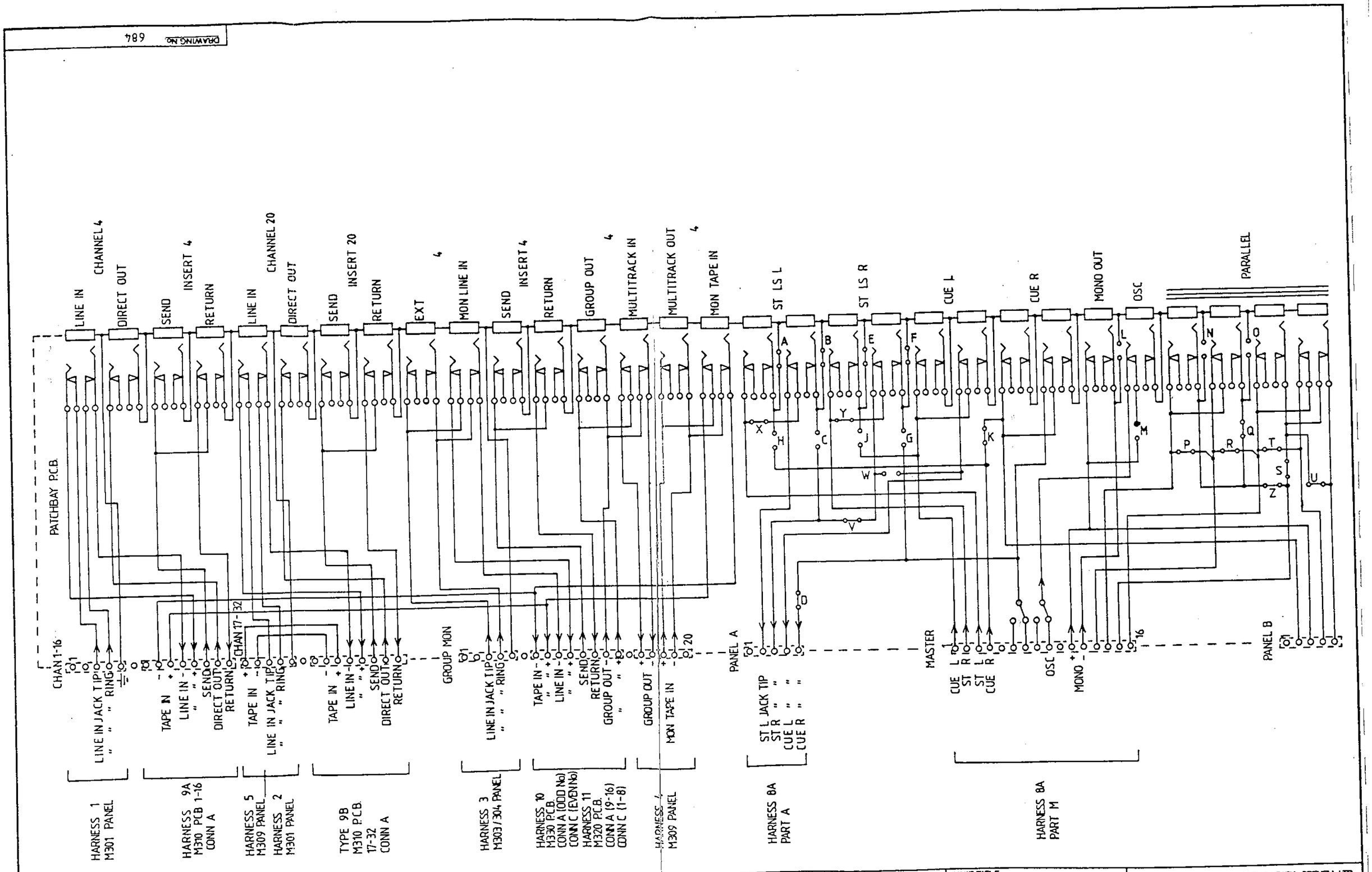

TON	PRODUCTION	JULY 88	R
DRAWN	REVISION	DATE	CHECKED

STANDARD NOTES
ALL DIMENSIONS IN mm
DO NOT SCALE DRAWING
THIRD ANGLE PROJECTION
REMOVE ALL BURRS & SHARP EDGES

SCALE

MATERIAL

TOLERANCES
GENERAL ±0,25 mm
HOLE CENTRES ±0,15 mm
HOLE SIZES ±0,10 mm

UNLESS STATED OTHERWISE

FINISH

NOTES
PCB BOARD REF No AG0219 iss 2
BOARD TYPE 4
FOR CH 4/20 AND M350 MONITOR

UNIT TITLE
SABER SERIES

DRAWING TITLE
PATCHBAY BOARD CIRCUIT

AHB
ALLEN & HEATH BRENELL LTD.
PROFESSIONAL AUDIO EQUIPMENT MANUFACTURERS
DESIGN DEPT 69, SHIP STREET, BRIGHTON BN1 1AE Tel 02731 24828
FACTORY KERNICK INDUSTRIAL EST, PENRYN, CORNWALL Tel 02326 73079

DRAWING No. 684
ISSUE 1

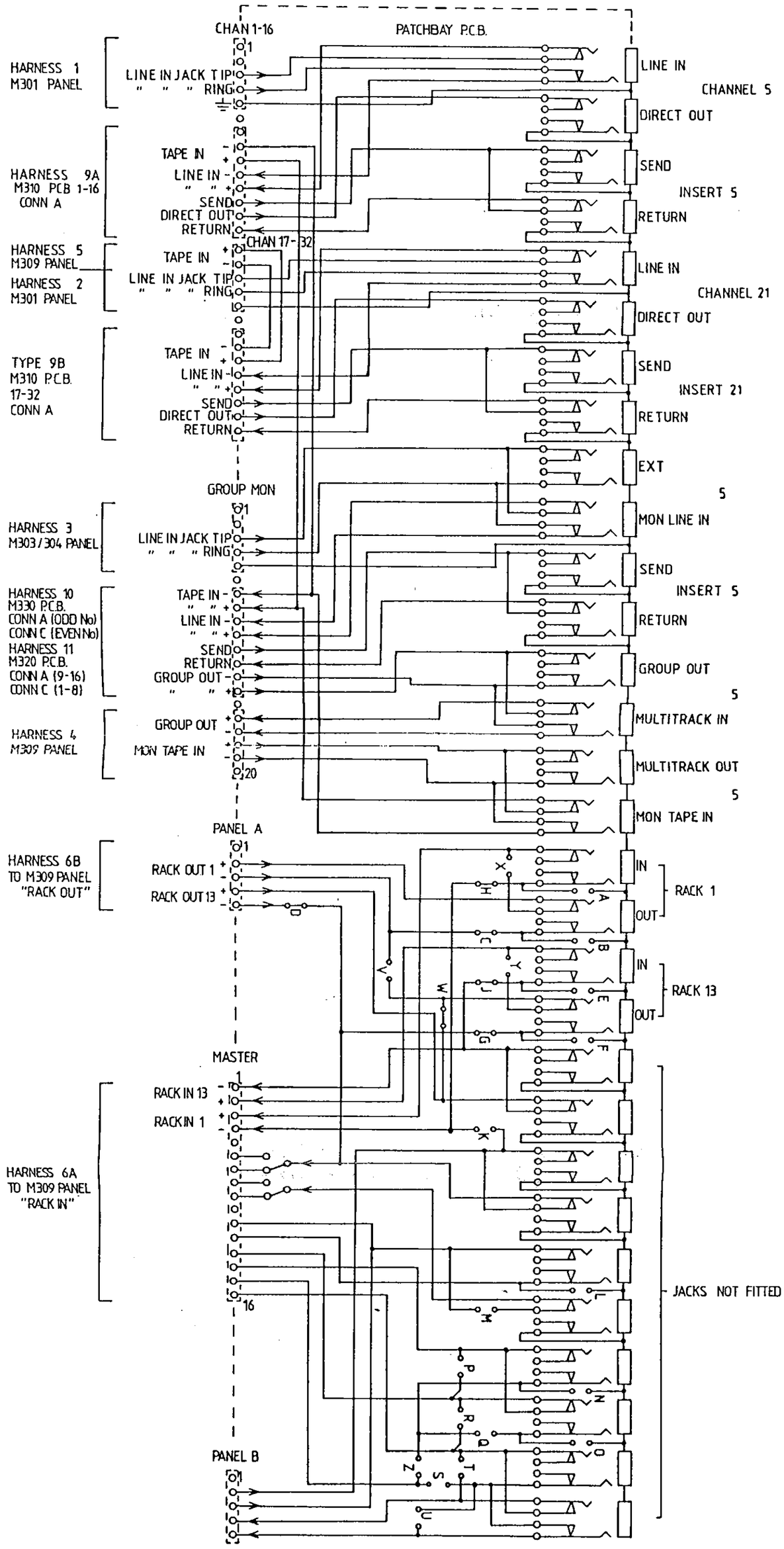

DRAWING No. 683

STANDARD NOTES
ALL DIMENSIONS IN mm
DO NOT SCALE DRAWING
THIRD ANGLE PROJECTION
REMOVE ALL BURRS & SHARP EDGES

SCALE

MATERIAL

TOLERANCES
GENERAL ±0.25 mm
HOLE CENTRES ±0.15 mm
HOLE SIZES ±0.10 mm
UNLESS STATED OTHERWISE

FINISH

NOTES
PCB BOARD REF No AG0219 iss 2
BOARD TYPE 5
FOR CH 5/21-CH 16/32 incl.

UNIT TITLE
SABER SERIES

DRAWING TITLE
PATCHBAY BOARD CIRCUIT

DRAWING No. 683

ISSUE 1

AHB
ALLEN & HEATH BRENELL LTD
PROFESSIONAL AUDIO EQUIPMENT MANUFACTURERS
DESIGN DEPT 64 BWP STREET, BRIDPORT DH6 1AE Tel 01273 24828
FACTORY KERNICK INDUSTRIAL EST. PENRYN, CORNWALL Tel 01326 72200

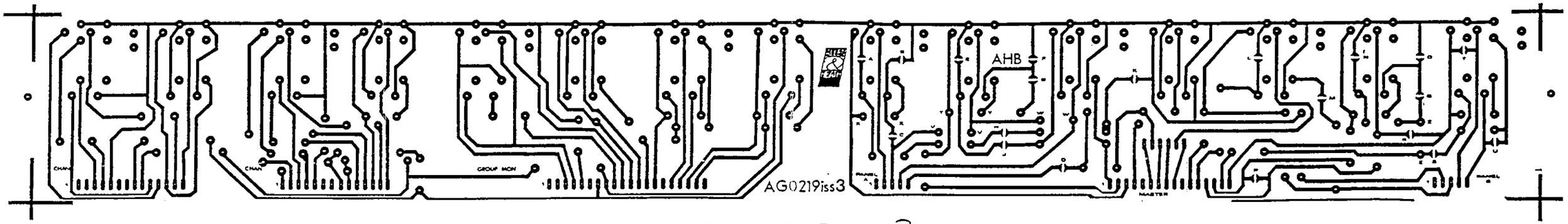

DRAWING No: BW375 ISSUE 3

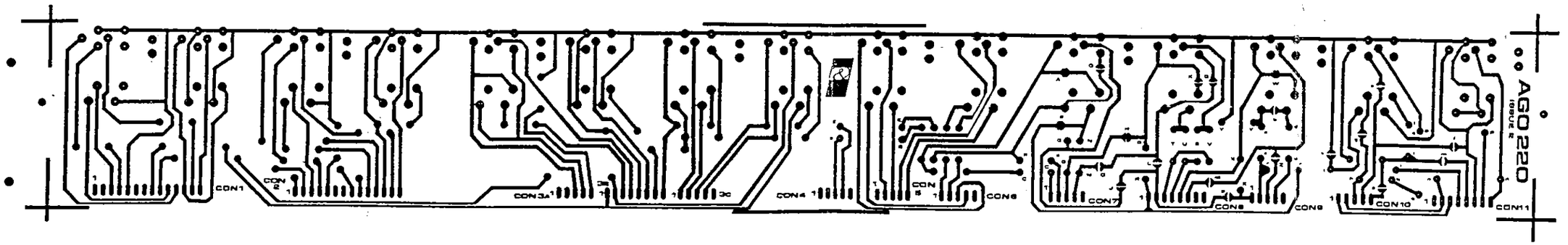

ALLEN + HEATH
DRAWING No. BW 378
BY: I.M.B. 6-5-90

SABER 24 TRACK PATCHBAY

TRACK ARTWORK

PCB AG0220 Issue 2

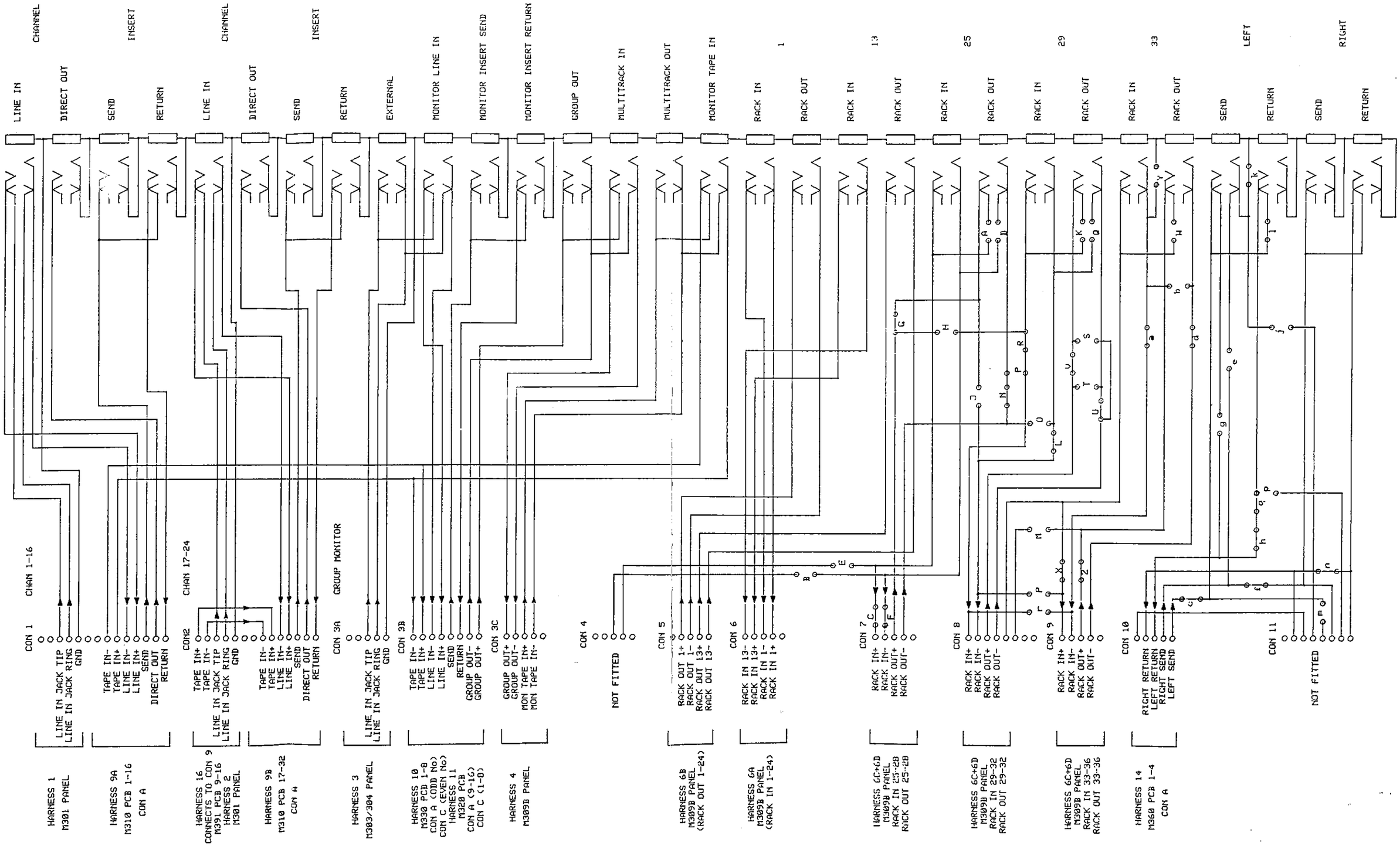

PCB No: AG0220 ISSUE 2

DRAWING No.
D035
ISSUE 1

1 OF 1
BY IMcB DATE 13-8-90

SABER 24 TRACK PATCHBAY
CIRCUIT DIAGRAM FOR PCB's 5-8

ALLEN & HEATH
KERNICK IND. EST.
PENRYN
CORNWALL TR10 9LU
TEL. 0326 72070
FAX. 0326 77097

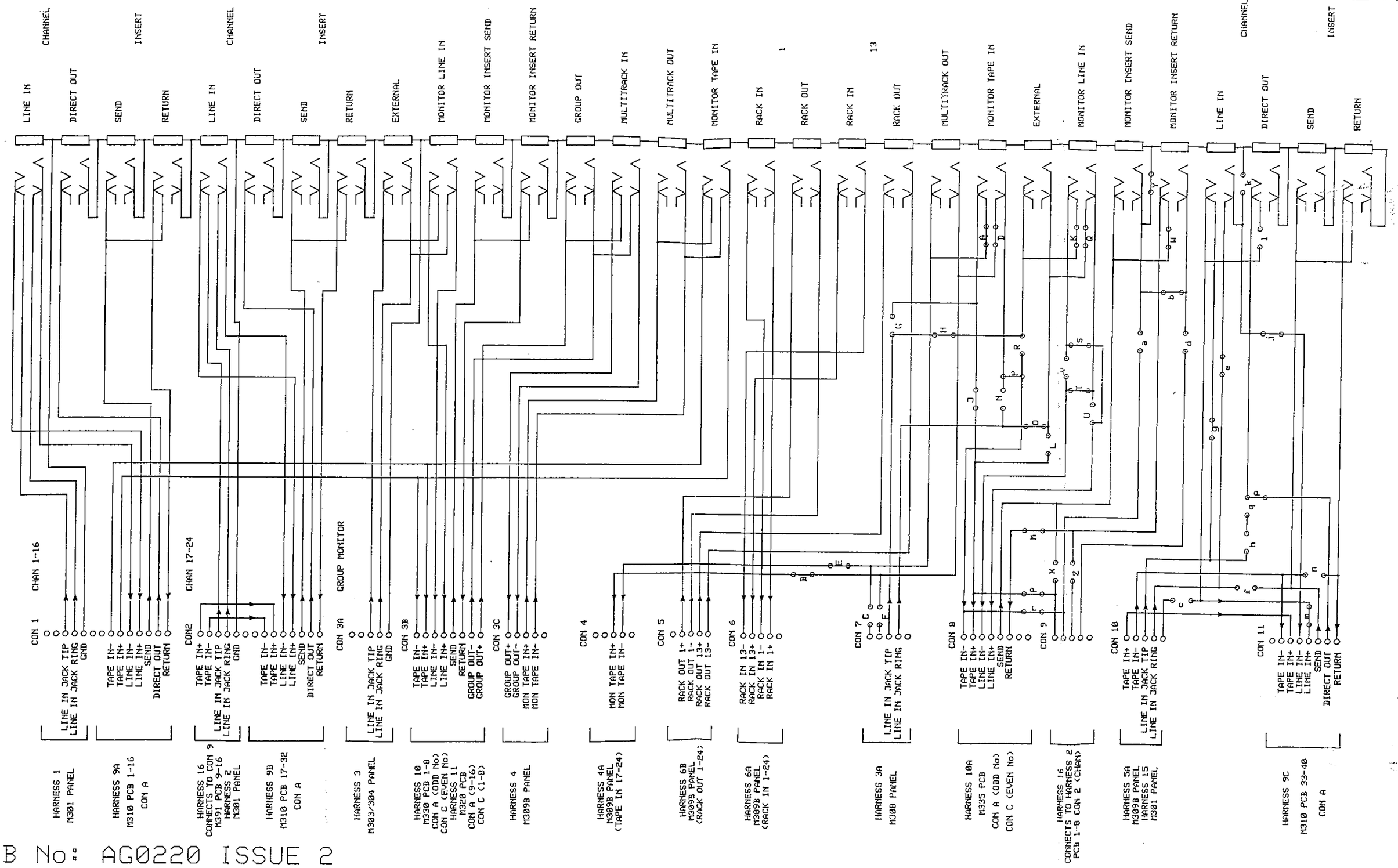

PCB No: AG0220 ISSUE 2

DRAWING No.
D036
ISSUE 1

1 OF 1

BY IMcB DATE 13-8-90

SABER 24 TRACK PATCHBAY

CIRCUIT DIAGRAM FOR PCB's 9-16

ALLEN & HEATH
KERNICK IND. EST.
PENRYN
CORNWALL TR10 9LU
TEL. 0326 72070
FAX. 0326 77097