Table of Contents

MZ15-RN Input module

Schematic Diagrams PC712

Schematic Diagrams PC713

Schematic Diagrams PC731

Schematic Diagrams PC779

Schematic Diagrams PC710

MZ15-RN Input module

General

The MZ-15 is an input-output or "in line" module, consisting of a PC712 main card, PC779 equaliser card, PC731 multitrack routc.., PC713 switch card and PC710 VCA card if fitted with automation.

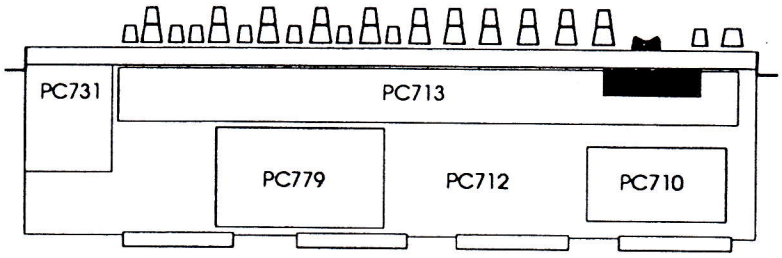

Fig 8-1 MZ15 -RN Input Module and Sub-assemblies

It has two signal paths, one termed the channel path, the other the monitor path.

A comprehensive routing system allows the microphone, line, buss and tape inputs and other module features to be switched between these paths. Several of the switches can be controlled by the switch group masters and/or the automation system.

Note *The internal operating level is -3dB relative to external inputs and outputs.*

Circuit description: Channel Path

Mic amplifier

The microphone input is fitted with a "DI" switch providing 30dB attenuation with corresponding impedance adjustment and r.f. filter. The mic amplifier has an adjustable range of 66dB via a rotary switch with 6dB steps.

Line Amplifier

The line amplifier is electronically balanced with a gain of -3dB and is followed by the mic/line selector switch and a variable gain stage of +/-10dB. This stage provides an adjustable input range when the line amplifier is selected and a level trim when the mic input is selected.

Input Reverse

A quad single pole single way analogue switch (U5) selects the source to the channel and monitor paths. Normally the Mic/Line input is routed to the channel and the Buss/Tape return to the monitor path.

This arrangement is reversed by control signal "IP-REV-C". The signal to the channel path is buffered by U9. The signal to the monitor path is buffered by the first part of U11 and inverted by the second half of U11 to produce the required polarity.

Note *Because the two buffer amplifiers are operated as virtual earth inputs, it is not possible to measure the switched outputs of U5 directly. This can be achieved by unplugging the appropriate following buffer amplifier.*

Phase Switch

Phase reversal of the signal is achieved by inserting a unity gain inverting amplifier (U11 on the PC779 sub-card) into the signal path. Normally this is bypassed by switch S37.

Insert Point

The "INSERT PRE" switch (S25) moves the position of the insert between pre and post the Filter/EQ section. The insert send amplifier (HY1) is an AT8 hybrid circuit with a balanced output, configured to have a make-up gain of 3dB. The insert return is a balanced input stage with -3db gain overall.

The output of this amplifier or the feed to the input of the insert send is selected by U15 (a triple two input demultiplexer) in order to switch the insert point in and out of circuit.

Note *The output of the insert send is not affected. The signal from the "INSERT IN-OUT" switch is buffered by U14 (a unity gain, virtual earth input stage).*

Filters

The filter section comprises two stages (HI-Pass and LO-Pass) which can be individually switched in and out of circuit. Additionally, the whole filter stage can be switched between the channel and monitor paths. The -3dB (half-power) points of the filter sections are 120Hz and 10kHz, with a roll off rate of 12dB/octave.

Equaliser

The equaliser section consists of four biquad sections, with the following characteristics:

HF: Freq sweep 500Hz-20kHz shelving with a Q of 0.5 when BELL is selected. Cut and boost is +/-18dB.

MF1: Freq sweep 350Hz-15kHz with a Q variable from 0.5 to 10, or switchable between 0.75 and 2 using the HIGH-Q switch. Cut and boost is +/-14dB.

MF2: Freq sweep 40Hz-2.5kHz with a Q switchable between 0.75 and 2 using the HIGH-Q switch, or variable between 0.5 and 10 using the Q control. Cut and boost is +/-14dB.

LF: Freq sweep 30Hz-2.5kHz or with a Q of 0.5 when BELL selected. Cut and boost is +/-18dB.

The Equaliser stage can be switched between the channel and monitor paths in two blocks of the HF and LF sections and/or both MF sections. The entire stage can be bypassed by the "EQ IN" relay (K1). This is controlled by the EQ-C logic signal.

Overload Detector

The output of the "INSERT PRE" switch feeds the overload/law generator which comprises a rectifier stage followed by a non-linear DC amplifier. The output of the amplifier is limited by a zener diode and available on connector J1.

An unlimited output of the amplifier is fed to the overload detector. This is compared to the O/L REF voltage by U20 which drives the overload LED via Q3. The O/L REF voltage is +8.9 volts, which corresponds to an overload level of +14dB.

Channel Mute

The output of the "INSERT PRE" switch feeds the mute element U16 (4053) which follows control line "MUTE-ALL" via Q9 (2N3904). This is an automated switch function via the ASICs.

The channel audio signal is switched at virtual potential and buffered by one half of following stage U18 before feeding the fader reverse switch (S48).

The channel mute switch is fitted remotely to the fader panel and connects directly to the PC712 main pcb via a 5 pin Molex.

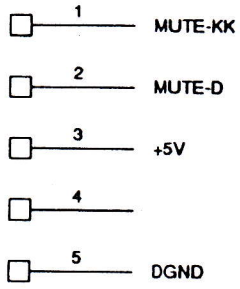

Fig 8-2 MUTE Molex Connector

Channel Fader

The channel and monitor faders can be exchanged between the channel and monitor paths using the "FADER REV" switch.

The VCA (sub-assembly PC710) acts as the main audio fader with a variable DC voltage from the channel fader wiper on its control input.

In Bypass mode, the VCA is disabled and the audio is routed directly via the channel fader element.

Note *The fader element is fitted remotely to the MZ90 panel directly below the MZ15-RN module and connects to PC712 via the motherboard edge connectors.*

VCA Subcard PC710

The 710 VCA card uses a proprietary VCA device (DBX 2151), the associated control circuitry and the BYPASS system. The VCA has a typical gain range of 0dB to -90dB, controlled by the DC input on pin 3.

The VCA distortion (symmetry) is optimised by presets VR1 and VR2.

Each half of amplifier U4 buffers the audio output of the VCAs and provides a preset adjustment to give an overall maximum gain of unity.

The control voltage from the fader wiper, via the digitiser and computer, is fed to U2 on the "VCA" input.

"VCA-EXT" and "DC-OUT" are not used at present.

The second stage of U3 filters, scales and limits the rate of change of the control voltage.

The "BYPASS-C" signal originates from the ASIC and can be selected by the grouping computer.

Note *BYPASS is the default condition when the automation system is disabled.*

BYPASS System Operation

The VCA can be bypassed either by selecting BYPASS mode or by failure of the computer power (C+5V).

When BYPASS mode is selected BYPASS-C = "1"
When the computer power fails C+5V = "0"

Q3 provides a constant current of approximately 40mA for the relay coils which are energised with 4.5V across each. A logic "1" on BYPASS-C will turn Q1 and Q2 off allowing the relays to be energised and select BYPASS mode. A logic "0" on BYPASS-C will turn on both Q1 and Q2 reducing the voltage across the relays.

The collector resistor for Q2 limits the reduction in voltage across the relays so that they just drop out, giving quieter mechanical operation.

If the computer power fails or is not connected, both Q1 and Q2 turn off and the relays switch to BYPASS mode.

If the chassis is fully loaded at a later date, the extra PC725 card must be replaced by an input module.

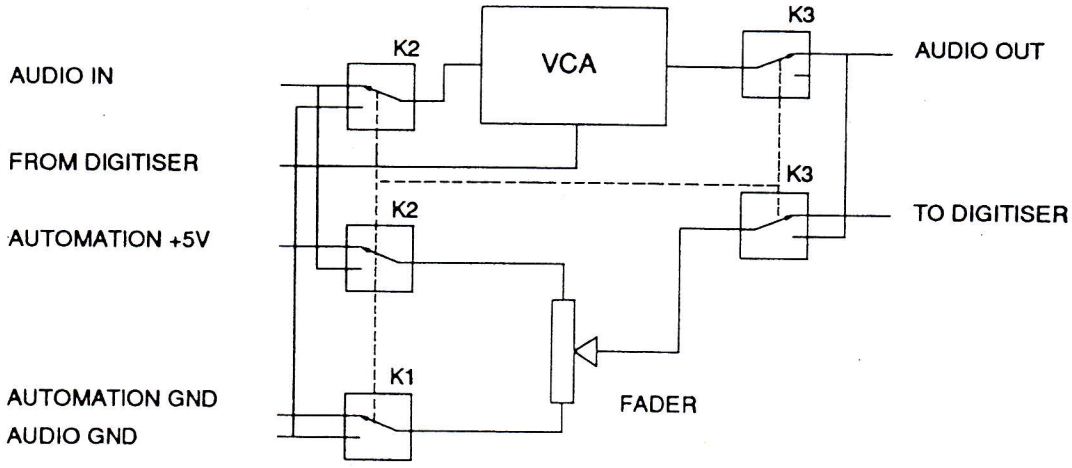

Fig 8-3 VCA BYPASS BLOCK

Channel Panpot

The outputs from the fader section feeds the pan pot which is configured to have a -3dB centre position. The outputs of the pan pots are buffered by voltage followers U30.

The pan "IN" switch allows the pan pot to be selected in or out of the circuit as required.

Channel Stereo Assign

Pan buffers U30 feed the channel stereo assign switch "ST" situated at the top of the module near the multitrack routing block.

The stereo assign switch is fitted with an indicator LED and feeds the post pan L&R channel signals onto stereo virtual earth busses "L HI" and "R HI".

Note *Corresponding ground sensing busses "L LO" and "R LO" are switched simultaneously.*

MIX Relay

Mix relay K2 assigns the 32 track routing block between the channel and monitor panpot outputs. In "RECORD" mode the routing block follows the channel panpot, in "MIX" mode the routing block follows the monitor panpot.

Note *The MIX relay operates in conjunction with the INPUT REVERSE function under automation control via the ASICs.*

PFL

The output of the "INSERT PRE" switch feeds the internal PFL-AFL switch S27. Switch S27 selects between PFL or stereo AFL (from the channel pan buffer outputs) and presents the preset signal to U42, a triple element analogue switch.

SOLO

U42 follows control line "SOLO-C" which is derived from the channel SOLO button. When operated, the preset PFL-AFL signal from S27 is switched directly by U42 onto the "SOLO L HI" and "SOLO R HI" virtual earth busses.

Note *Corresponding ground sensing busses "SOLO L LO" and "SOLO R LO" are switched simultaneously by part of U42 and part of U7 (both 4053 devices).*

32 Track Routing

The output of MIX relay K2 feeds a set of 8 pairs of multitrack send switches at the top of the module. These are arranged such that odd numbered sends are fed from the L pan signal and even numbered sends are fed from the the R pan signal.

The bank select switch (S9) allows the routing switches to address busses 1-16 OR busses 17-32.

Note *Odd numbered switches and the bank switch are contained on routing sub-assembly PC731.*

Buss Mixer

The buss mix amplifier is configured from U17 and U18 (MC33078) with a clean ground reference from the "REFGND" buss via J3.

Internal switch S28 selects the mix amplifier input between the channel post fader output and an external virtual earth buss.

For modules fitted to positions 1-32 the normal mode is "off buss" providing the necessary summing amplifiers for the 32 track buss system. Virtual earth buss signals are individually wired to each module position on the motherboard underside.

Buss Driver

The buss driver amplifier (HY2) is a custom hybrid AT8 design and provides the electronically balanced buss output configured with +3dB gain to replace the -3dB internal operating level loss.

The mix amp signal is routed to the driver stage via trimmer R199 allowing the buss output to be calibrated. The buss trimmer is externally accessed via the facepanel.

Output CMRR may be adjusted via R200, however this is factory preset and should not require any further adjustment.

Circuit Description: Monitor Path

Buss/Tape Return

The Tape and Buss return inputs are identical electronically balanced input amplifiers with -3dB gain. The outputs of these two stages feed a quad single pole single way analogue switch (U6) to give A/B (Buss/Tape) selection.

The switch status is determined by the control signal "A/B-C". The output of the switch is buffered by U10 and then feeds the Buss/Tape return gain stage which has an adjustable range of +/-10dB.

Meter Output

The output of U10 is also taken via the "Meter Off Channel" switch (S21) which selects between the A/B or PFL signal which can be monitored by the channel meter via buffer amplifier U13. This stage has a make-up gain of +3dB providing nominal level to the meter.

Monitor Mute

The output of the channel insert switch (S39) feeds the monitor mute element U41 (4053) which follows control line "MON-A".

This is an automated switch function via the ASICs.

The monitor audio signal is switched at virtual potential and buffered by one half of following stage U28 before feeding the fader reverse switch (S48).

Monitor Fader

The channel and monitor faders can be exchanged between the channel and monitor paths using the "FADER REV" switch.

The monitor fader is followed by a buffer amplifier with a gain of +10dB to compensate for the -10dB loss when the fader is set to "0" operating position.

Monitor Panpot

The output from the monitor fader section feeds the pan pot which is configured to have a -3dB centre position. The outputs of the pan pots are buffered by voltage followers U29 which in turn feed the MIX relay, Monitor SOLO switching element U43 and Stereo assign elements U7 and U8.

Monitor Stereo Assign

The monitor stereo assign "ST" switch (S20) is situated adjacent to the monitor fader and is fitted with an indicator LED. S20 controls elements U7 and U8 directly which in turn switch the post pan L&R monitor signals onto stereo virtual earth busses "L HI" and "R HI".

Note *Corresponding ground sensing busses "L LO" and "R LO" are switched simultaneously.*

Monitor SOLO

U43 follows control line "MON-SOLO" which is derived from the channel monitor AFL button. When operated, the post pan signal is switched directly by U43 onto the "SOLO L HI" and "SOLO R HI" virtual earth busses.

Note *Corresponding ground sensing busses "SOLO L LO" and "SOLO R LO" are switched simultaneously by part of U41 and part of U43 (both 4053 devices).*

Auxiliary Send Pre-Post Mute Jumper

An internal jumper determines the auxiliary source for the PREFADE signal. This may be configured to be either PRE or POST the channel signal only and is effective on ALL auxiliary sends.

Mono Auxiliary Sends

Aux 1-4; Aux 9-12

The module is fitted with 8 discrete mono auxiliary sends using four pairs of dual-concentric pots. The upper knobs control auxiliary busses 1 to 4 and the lower knobs control busses 9 to 12.

Auxiliary Mute

Mute switches are fitted which operate on each concentric pot PAIR (i.e. Aux 1 & 9 share the same mute switch), thus auxiliary buss assignment requires some care to preserve flexibility of auxiliary mute operations.

Aux 2(10), Aux3(11) and Aux4(12) operate in an identical manner to that described above.

Mute operations are performed via analogue switches U31 - U36 (4053 devices) which operate directly onto the buss at virtual earth potential.

Note *Corresponding ground sensing busses are switched simultaneously.*

Auxiliary Pre-Post and To Monitor Switching

"Pre-Post" and "To Monitor" switching are also shared functions operating on adjacent concentric pot stacks, thus Aux 1-2; 9-10 share the same "pre-post" switch (S11) and "to monitor" switch (S12) with Aux3-4; 11-12 sharing the other two switches S13 & S14 respectively.

Stereo Auxiliary Sends

5-8;13-16

The module is also fitted with two sets of stereo auxiliary sends comprising a dual concentric pot stack level/pan arrangement. The upper knob controls the send level, the lower knob the L-R panning function.

Stereo Auxiliary Buss Assignment

A bank switch is provided (S18) which allows the stereo sends to address busses 5-8 OR busses 13-16 as stereo pairs.

Stereo Auxiliary Mute

Mute switches are fitted which operate on each concentric pot stack. (i.e. Aux busses 5-6 and 13-14 will effectively share the same mute switch), thus auxiliary buss assignment requires some care to preserve flexibility of auxiliary mute operations.

Mute operations are performed via analogue switches U38 - U40 (4052 devices) which operate directly onto the buss at virtual earth potential.

Note *Corresponding ground sensing busses are switched simultaneously.*

Stereo Auxiliary Pre-Post and To Monitor Switching

"Pre-Post" and "To Monitor" switching are also shared functions operating on BOTH concentric pot stacks, thus Aux 5-8; 13-16 share the same "pre-post" switch (S15) and "to monitor" switch (S16)

Aux 7-8 Mono

Aux sends 7-8 are fitted with additional switching (S17) to allow separate MONO operation. When operated the upper knob sends discretely to Aux 7, the lower knob to Aux 8.

During MONO operation, pan ballast resistor R229 (3K3) is removed and a law ballast resistor R230 (2K7) is added between the pot wiper and ground in order to simulate an audio taper "feel" to the pot. The source for Aux 8 is also taken directly from PRE buffer U26.

Note *For operational reasons during MONO operation it is not recommended to use the "Monitor Fader To Aux" feature as this configuration would place the short travel monitor fader on Aux 7 leaving the concentric pot on Aux 8.*

Aux 7-8 Monitor Fader to Aux

Aux sends 7-8 are also fitted with additional switching (S19) to place the Aux level pot into the monitor path and the current monitor fader into the Aux 7-8 audio path.

The input and output points of aux level buffer U26 are termed "AUX<" and "AUX>" respectively and are placed between the poles of switch S19. These signals are switched against points "X3" and "X4" which represent the PRE and POST level signals for auxiliaries 7-8, thus under normal conditions "X4" becomes "AUX<" and "X3" becomes "AUX>".

Depending upon the status of fader reverse switch S48, the current monitor fader PRE and POST signals are found at points "REV-A" and "REV-B" at switch S19 which then transfers them to "MON<" and "MON>" respectively for all monitor related functions.

When switch S19 is operated "AUX<" and "AUX>" points are ALWAYS switched to "MON<" and "MON>" to place the aux level pot into the monitor path. At the same time auxiliary PRE-POST points "X4" and "X3" will be switched to points "REV-A" and "REV-B" which will be the PRE-POST signals of the current monitor fader.

Aux 7-8 to Multitrack

Aux sends 7-8 are also fitted with additional switching (S29) to place the Aux Pan signals onto the 32 track bussing system, thus expanding the system auxiliary bussing capabilities when normal multitrack routing is not in use. Switch S29 is located near the multitrack routing bank switch.

When operated, switch S29 selects between Aux 7-8 pan signals and "L-A; R-A" pan signals which are the outputs of MIX relay K2. This allows the "Aux to 32 Track" feature to override the normal pan signals in either RECORD or MIX mode.

Note *When operated, S29 also operates the mute elements U39 and U40 (4052) for Aux busses 7 and 8.*

Channel Logic Control

The channel module contains two ASICS (application specific integrated circuit), U44 and U45. These contain the latches for the switching elements that can be controlled by the module switches, automation and grouping computer.

The ASIC comprises eight latches, each with two inputs (INA and INB) and two outputs.

The INA 0-7 inputs originate from the switches on the module. The INB 0-7 inputs are produced by the PC700 digitiser card via connector J1. These signals originate from the automation computer and correspond to the switch signals on INA 0-7.

Switch input from INA 0-7 will toggle the ASIC outputs. Automation input from INB 0-7 causes the output to follow the input edge triggering. A leading edge will force the output HI; a trailing edge will force the output LO.

The LED output can directly drive an LED whilst the control output is intended for use with CMOS only. The OUT signal is sent to the appropriate analogue switching element in the module. Additionally, the signal is fed back to the digitiser card via connector J1.

RESET when HI resets all latches, hence is permanently connected to ground.

A HI on the WRITE line writes serial data to the selected latch.

Address lines A0;A1;A2 select one of eight latches. Address lines A3;A4;A5 and B3;B4;B5 act as an address comparator to simplify decoding.

DI/O is the serial i/o line.

$\overline{CS}$ is the chip select.

In the event of a failure of the +5volt rail, the power to the ASIC is maintained by the UBATT supply which is derived from ni-cad batteries on the PC722 monitor sub-mother board.

$\overline{PWRFAIL}$ when LO isolates all ASIC latch inputs and outputs to avoid corruption of current status data during power on / powerdown.

Quick Check Guide

Centralise all pots; release all switches unless mentioned; set oscillator to 1kHz				
Point	**Function**	**Conditions**	**Level**	**IC**
1	Mic Input	0dB in; gain min	-3dB	U2; pin1
2	Line Input	0dB in; gain unity	-3dB	U2; pin7
3	Mic Trim/Line Gain	0dB in; select LINE	-3dB	U4; pin7
4	I/P REV Channel	As above	-3dB	U9; pin7
5	Phase REV	As above	-3dB	U11; pin1 (PC779)
6	HP Filter	As above; Filters IN	-3dB	U13; pin7 (PC779)
7	LP Filter	As above	-3dB	U14; pin7 (PC779)
8	HF EQ	As above; EQ IN	-3dB	U3; pin7 (PC779)
9	MF1 EQ	As above	-3dB	U5; pin1 (PC779)
10	MF2 EQ	As above	-3dB	U9; pin1 (PC779)
11	LF EQ	As above	-3dB	U12; pin1 (PC779)
12	Insert Send	As above	0dB	HY1; across pins 8&12
13	Insert Return	As above	-3dB	U13; pin1
14	Insert In/Out Buffer	As above	-3dB	U14; Pin7
15	Aux PRE Source	As above	-3dB	U18; pin1
16	Channel Mute	As above	-3dB	U18; pin7
17	CH Fader O/P	As above; fader unity	-3dB	J5; pins A11-C11
18	L Channel Pan	As above; pan left (Pan IN)	-3dB	U30; pin1
19	R Channel Pan	As above; pan right (Pan IN)	-3dB	U30; pin7
20	Mix amplifier	As above; channel assigned to itself	-6dB	U18; pin7
21	Buss Driver	As above	0dB	HY2; across pins 8&12
22	Tape Input	0dB in	-3dB	U9; pin1
23	Buss Input	0dB in	-3dB	U10; pin1
24	Buss/Tape Select	As above	-3dB	U10; pin7
25	Meter O/P	As above	0dB	U13; pin7
26	Buss/Tape Gain	As above; gain unity	-3dB	U4; pin1
27	Input REV Monitor	As above	-3dB	U11; pin7
28	Monitor Mute	As above	-3dB	U28; pin1
29	Monitor Fader O/P	As above; fader unity	-3dB	U28; pin7
30	L Monitor Pan	As above; pan left	-3dB	U29; pin7
31	R Monitor Pan	As above; pan right	-3dB	U29; pin1
32	Aux 1	As above for channel; pot max	-3dB	U20; pin7
33	Aux 2	As above	-3dB	U21; pin7

Centralise all pots; release all switches unless mentioned; set oscillator to 1kHz				
Point	**Function**	**Conditions**	**Level**	**IC**
34	Aux 3	As above	-3dB	U21; pin1
35	Aux 4	As above	-3dB	U22; pin7
36	Aux 5-6/13-14 Level	As above; pot max	-3dB	U24; pin1
37	Aux 5/13	As above; pan L	-3dB	U25; pin1
38	Aux 6/14	As above; pan R	-3dB	U25; pin7
39	Aux 7-8/15-16 Pre Level (Mono)	As above	-3dB	U26; pin1
40	Aux 7-8/15-16 Level	As above; pot max	-3dB	U26; pin7
41	Aux 7/15	As above; pan L	-3dB	U27; pin7
42	Aux 8/16	As above; pan L	-3dB	U27; pin1
43	Aux 9	As above; pot max	-3dB	U22; pin1
44	Aux 10	As above	-3dB	U23; pin7
45	Aux 11	As above	-3dB	U23; pin1
46	Aux 12	As above	-3dB	U24; pin7

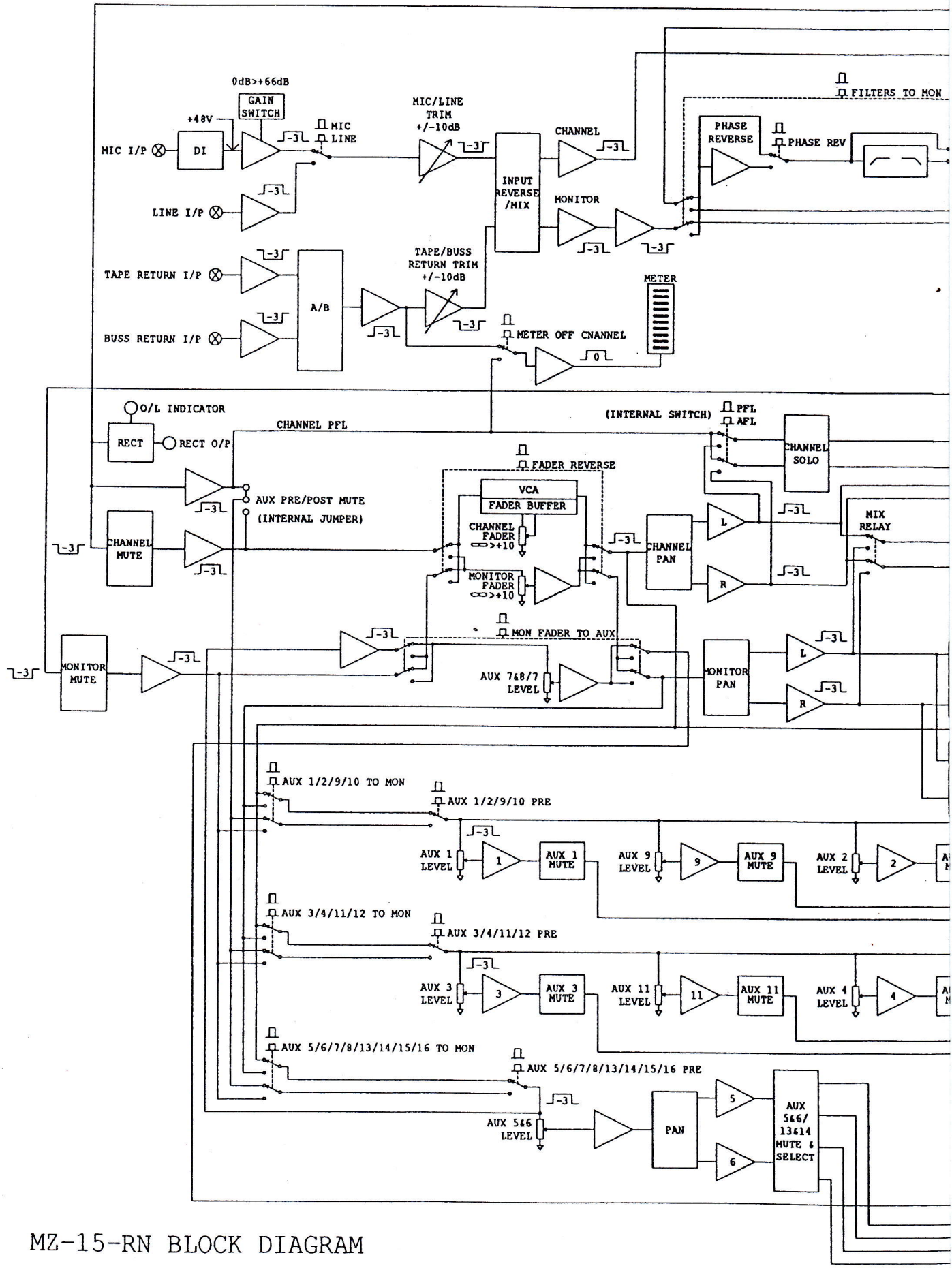

MZ-15-RN BLOCK DIAGRAM

Drg No. WAM/3/007 Rev.

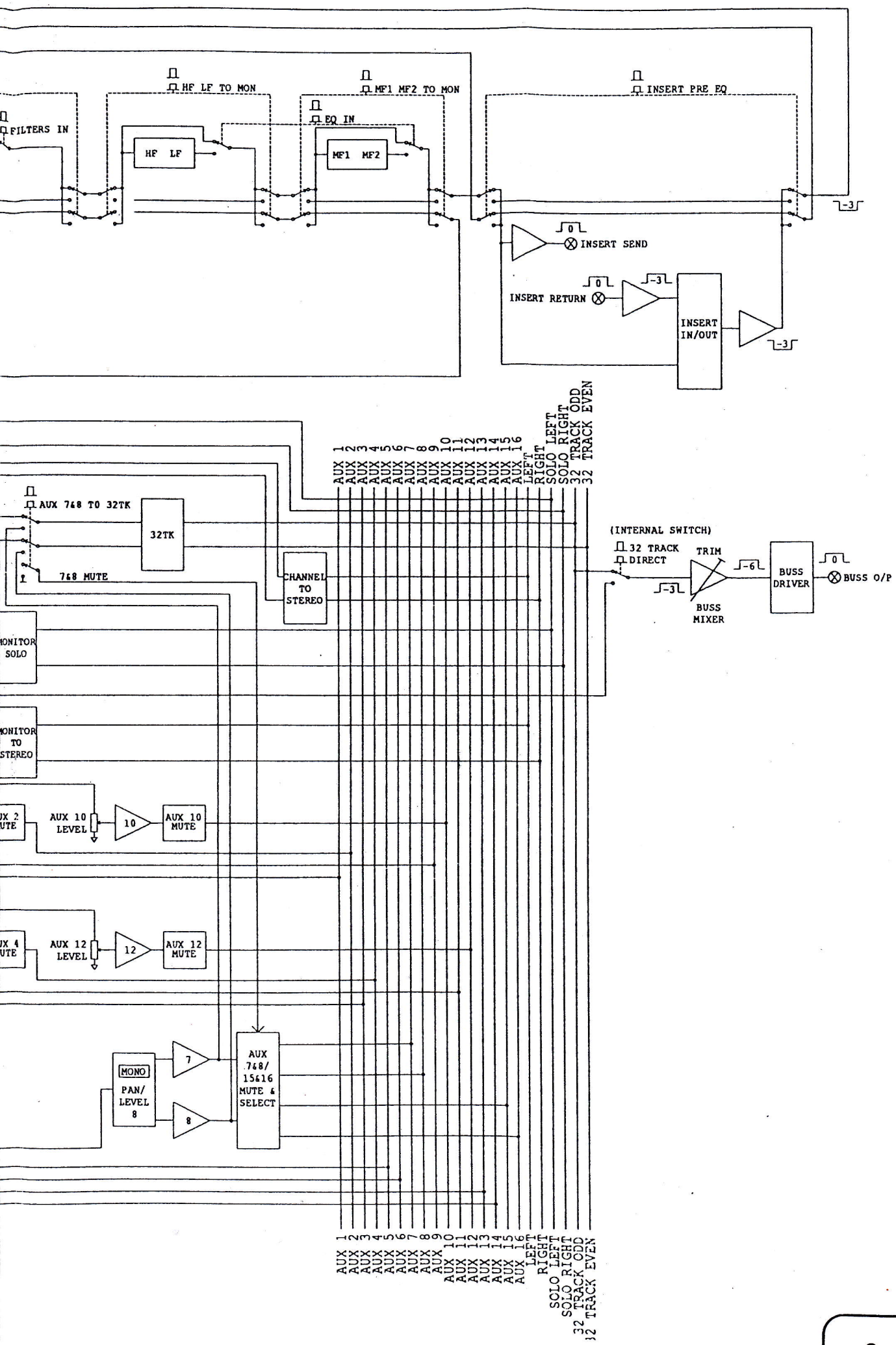
FILTERS IN
HF LF TO MON
HF LF
MF1 MF2 TO MON
EQ IN
MF1 MF2
INSERT PRE EQ
INSERT SEND
INSERT RETURN
INSERT IN/OUT
AUX 1 AUX 2 AUX 3 AUX 4 AUX 5 AUX 6 AUX 7 AUX 8 AUX 9 AUX 10 AUX 11 AUX 12 AUX 13 AUX 14 AUX 15 AUX 16 LEFT RIGHT SOLO LEFT SOLO RIGHT 32 TRACK ODD 32 TRACK EVEN
AUX 7&8 TO 32TK
32TK
7&8 MUTE
CHANNEL TO STEREO
(INTERNAL SWITCH)
32 TRACK
DIRECT
TRIM
BUSS MIXER
BUSS DRIVER
BUSS O/P
MONITOR SOLO
MONITOR TO STEREO
AUX 10 LEVEL
10
AUX 10 MUTE
AUX 12 LEVEL
12
AUX 12 MUTE
MONO
PAN/ LEVEL 8
7
8
AUX 7&8/ 15&16 MUTE & SELECT

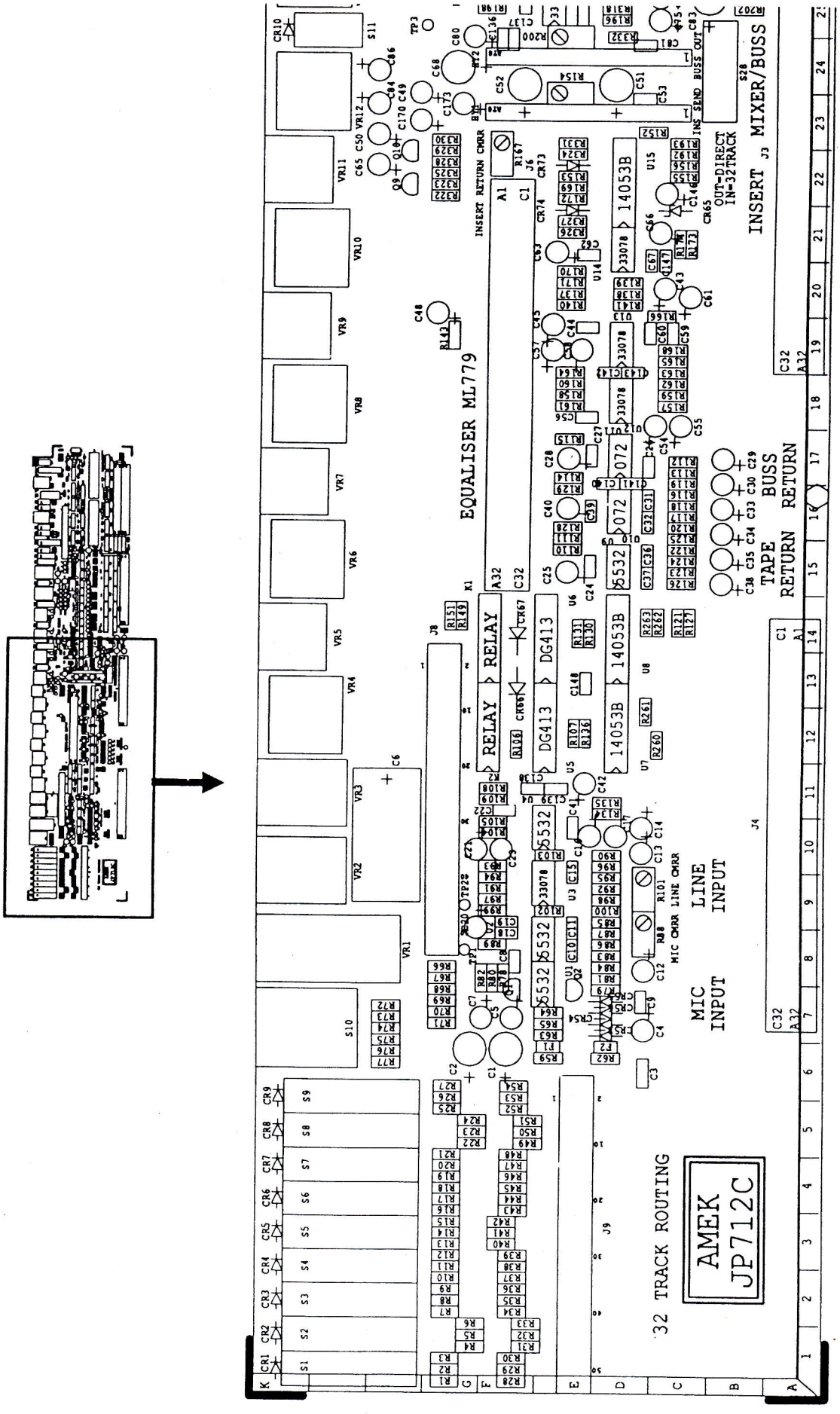

PC712 Component Reference (LH SIDE)

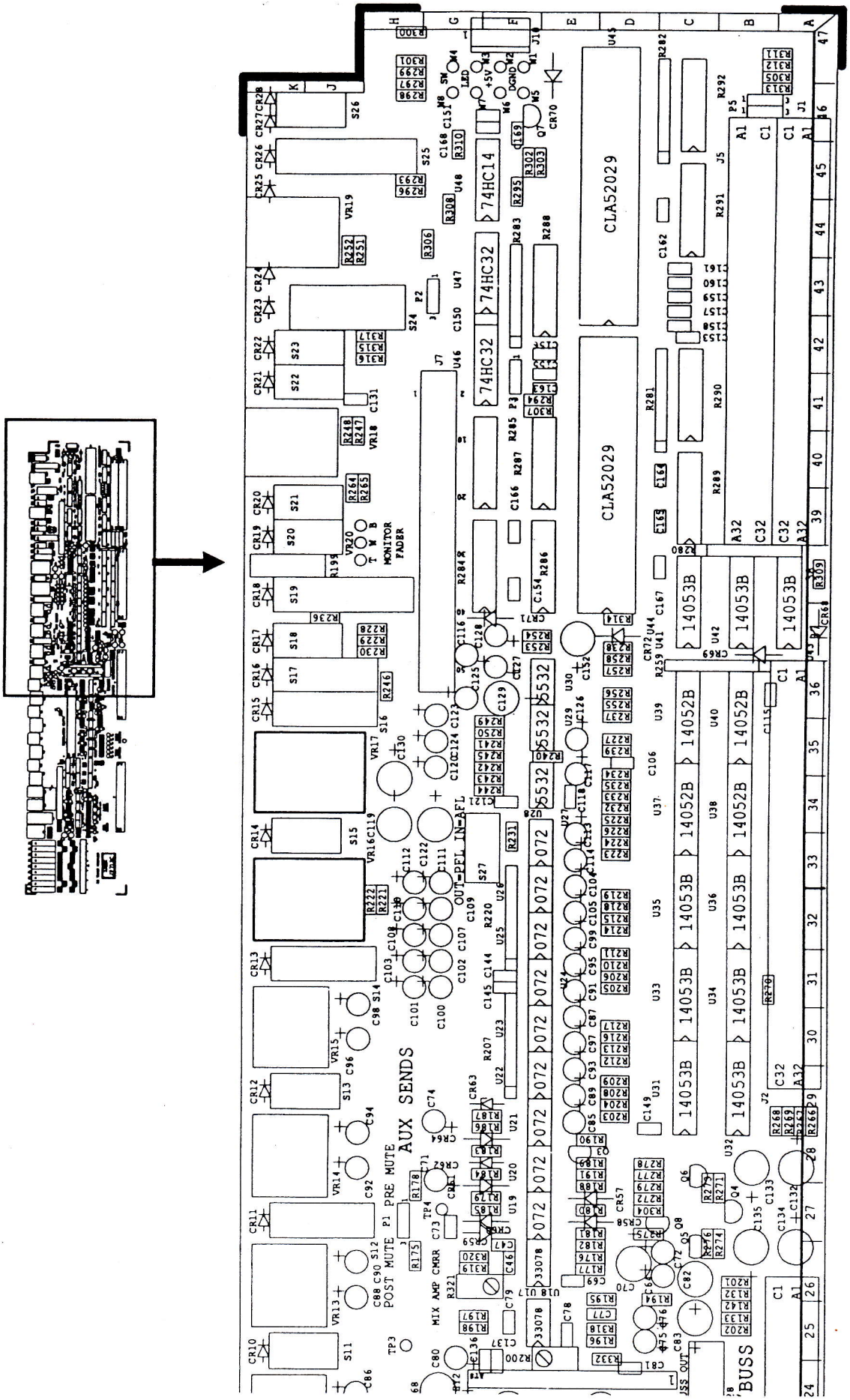

PC712 Component Reference (RH SIDE)

J1

IN4	A1	C1	IN8
IN3	A2	C2	IN7
IN2	A3	C3	IN6
IN1	A4	C4	IN5
DI/O	A5	C5	CS
REC-OUT	A6	C6	AFVIN
VCA	A7	C7	BFIN
FDWIPR	A8	C8	FDWIPL
FDBOT	A9	C9	FDBOT
FDTOPR	A10	C10	FDTOPL
IN12	A11	C11	IN16
IN11	A12	C12	IN15
IN10	A13	C13	IN14
IN9	A14	C14	IN13
CHASSGND	A15	C15	CHASSGND
AUDOUT	A16	C16	AUDOUT
SEL	A17	C17	NC
SOLOCTRL	A18	C18	CHECK
OUT8	A19	C19	OUT4
OUT7	A20	C20	OUT3
OUT6	A21	C21	OUT2
OUT5	A22	C22	OUT1
A1	A23	C23	A0
A3	A24	C24	A2
SELBUSS	A25	C25	RD
PWRFAIL	A26	C26	WIPER
C+5V	A27	C27	RESET
CGND	A28	C28	CGND
OUT16	A29	C29	OUT12
OUT15	A30	C30	OUT11
OUT14	A31	C31	OUT10
OUT13	A32	C32	OUT9

J2

SOLOR-HI	A1	C1	SOLOR-LO
SOLOL-HI	A2	C2	SOLOL-LO
AUX16-HI	A3	C3	AUX16-LO
AUX15-HI	A4	C4	AUX15-LO
AUX14-HI	A5	C5	AUX14-LO
AUX13-HI	A6	C6	AUX13-LO
AUX12-HI	A7	C7	AUX12-LO
AUX11-HI	A8	C8	AUX11-LO
AUX10-HI	A9	C9	AUX10-LO
AUX9-HI	A10	C10	AUX9-LO
AUX8-HI	A11	C11	AUX8-LO
AUX7-HI	A12	C12	AUX7-LO
AUX6-HI	A13	C13	AUX6-LO
AUX5-HI	A14	C14	AUX5-LO
AUX4-HI	A15	C15	AUX4-LO
AUX3-HI	A16	C16	AUX3-LO
AUX2-HI	A17	C17	AUX2-LO
AUX1-HI	A18	C18	AUX1-LO
R-HI	A19	C19	R-LO
L-HI	A20	C20	L-LO
AGND	A21	C21	AGND
AGND	A22	C22	AGND
AGND	A23	C23	AGND
-17.5V	A24	C24	-17.5V
-17.5V	A25	C25	-17.5V
+17.5V	A26	C26	+17.5V
+17.5V	A27	C27	+17.5V
DGND	A28	C28	DGND
DGND	A29	C29	DGND
+5V	A30	C30	+5V
+5V	A31	C31	+5V
UBATT	A32	C32	UBATT

J3

METER	A1	C1	SEL-MET
B(IND)	A2	C2	M(IND)
NC	A3	C3	NC
BOUT-HI	A4	C4	BOUT-LO
OSCN	A5	C5	OSCN
NC	A6	C6	NC
ISND-HI	A7	C7	ISND-LO
ISCN	A8	C8	ISCN
NC	A9	C9	NC
IRET-HI	A10	C10	IRET-LO
RSCN	A11	C11	RSCN
NC	A12	C12	NC
BRET-HI	A13	C13	BRET-LO
BSCN	A14	C14	BSCN
NC	A15	C15	NC
TRET-HI	A16	C16	TRET-LO
TSCN	A17	C17	TSCN
NC	A18	C18	NC
S-HI	A19	C19	S-LO
SSCN	A20	C20	SSCN
NC	A21	C21	NC
LINE-HI	A22	C22	LINE-LO
LINESCN	A23	C23	LINESCN
NC	A24	C24	NC
MIC-HI	A25	C25	MIC-LO
MICSCN	A26	C26	MICSCN
REFGND	A27	C27	REFGND
REFGND	A28	C28	REFGND
VIRT-HI	A29	C29	VIRT-LO
REFGND	A30	C30	REFGND
REFGND	A31	C31	REFGND
O/LREF	A32	C32	+48V

J4

32-HI	A1	C1	32-LO
16-HI	A2	C2	16-LO
31-HI	A3	C3	31-LO
15-HI	A4	C4	15-LO
30-HI	A5	C5	30-LO
14-HI	A6	C6	14-LO
29-HI	A7	C7	29-LO
13-HI	A8	C8	13-LO
28-HI	A9	C9	28-LO
12-HI	A10	C10	12-LO
27-HI	A11	C11	27-LO
11-HI	A12	C12	11-LO
26-HI	A13	C13	26-LO
10-HI	A14	C14	10-LO
25-HI	A15	C15	25-LO
9-HI	A16	C16	9-LO
24-HI	A17	C17	24-LO
8-HI	A18	C18	8-LO
23-HI	A19	C19	23-LO
7-HI	A20	C20	7-LO
22-HI	A21	C21	22-LO
6-HI	A22	C22	6-LO
21-HI	A23	C23	21-LO
5-HI	A24	C24	5-LO
20-HI	A25	C25	20-LO
4-HI	A26	C26	4-LO
19-HI	A27	C27	19-LO
3-HI	A28	C28	3-LO
18-HI	A29	C29	18-LO
2-HI	A30	C30	2-LO
17-HI	A31	C31	17-LO
1-HI	A32	C32	1-LO

PC712 Connector Pinout Details

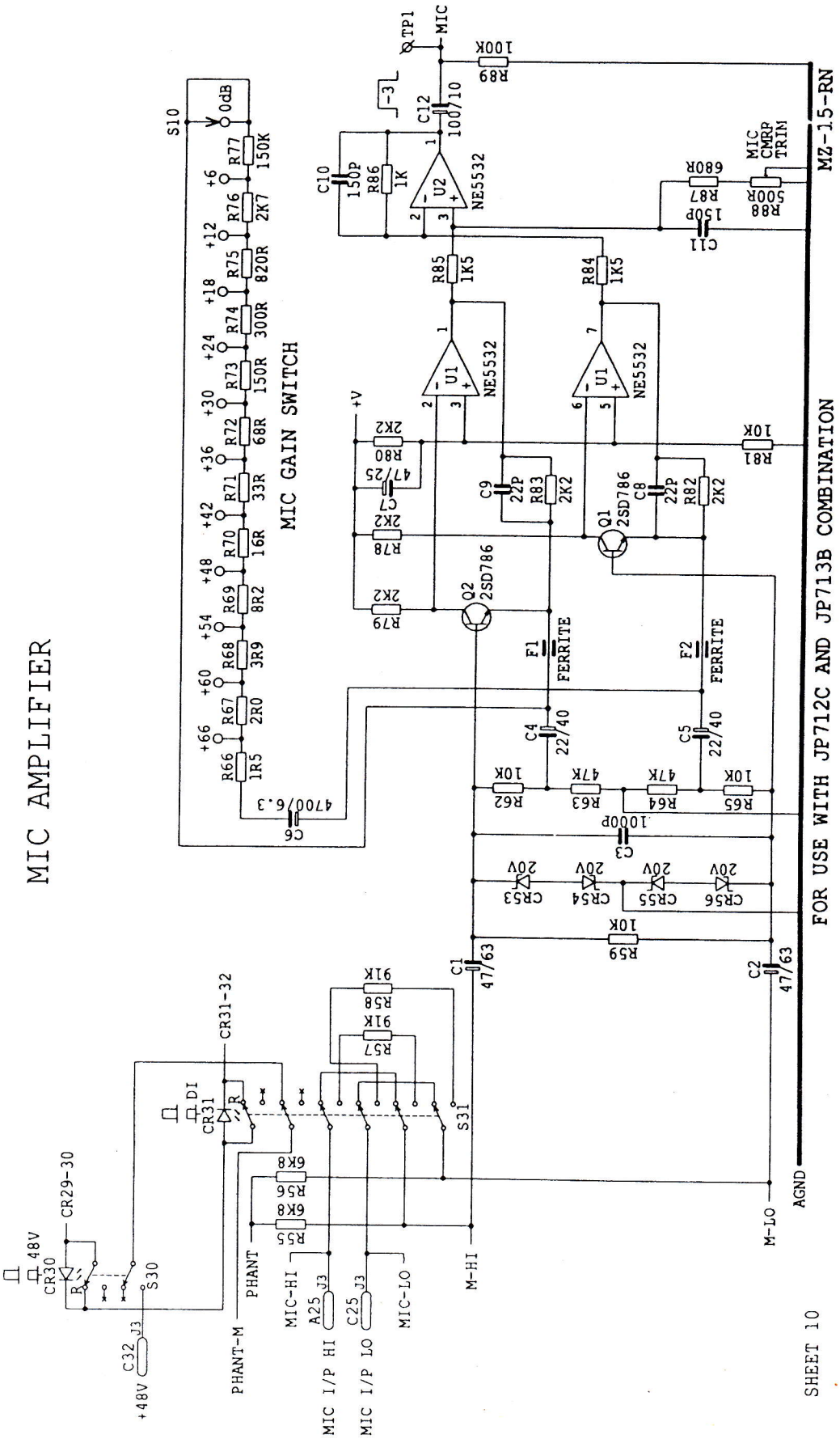
MIC AMPLIFIER
MIC GAIN SWITCH
FOR USE WITH JP712C AND JP713B COMBINATION
MZ-15-RN
PC712 MicAmplifier
SHEET 10
MIC
TP1
U1 NE5532
U2 NE5532
Q1 2SD786
Q2 2SD786
F1 FERRITE
F2 FERRITE
MIC CMRR TRIM
AGND
M-HI
M-LO
MIC-HI
MIC-LO
MIC I/P HI
MIC I/P LO
PHANT
PHANT-M
+48V
CR29-30
CR31-32
S10
S30
S31

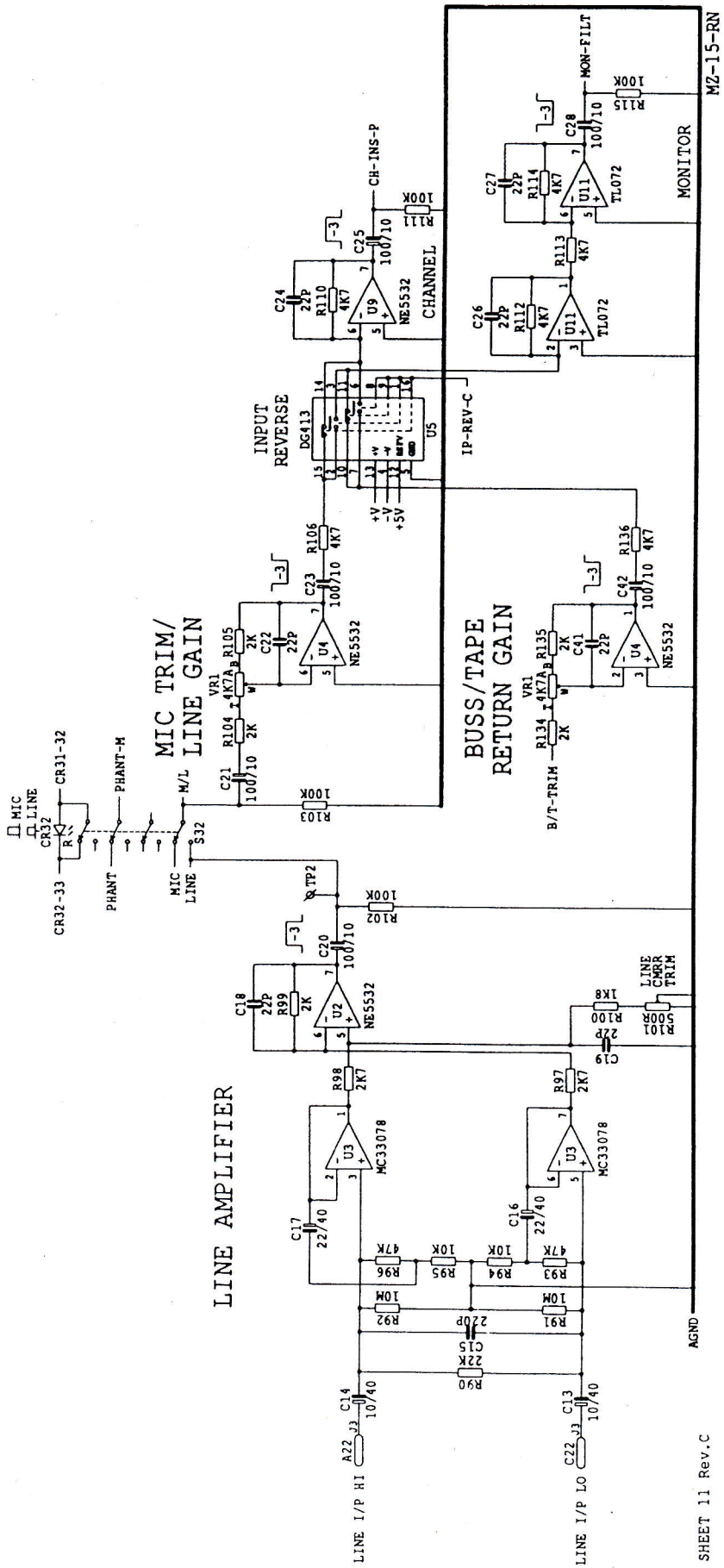

PC712 Line Amp; Mic Trim / Line Gain; Buss / Tape Return Gain

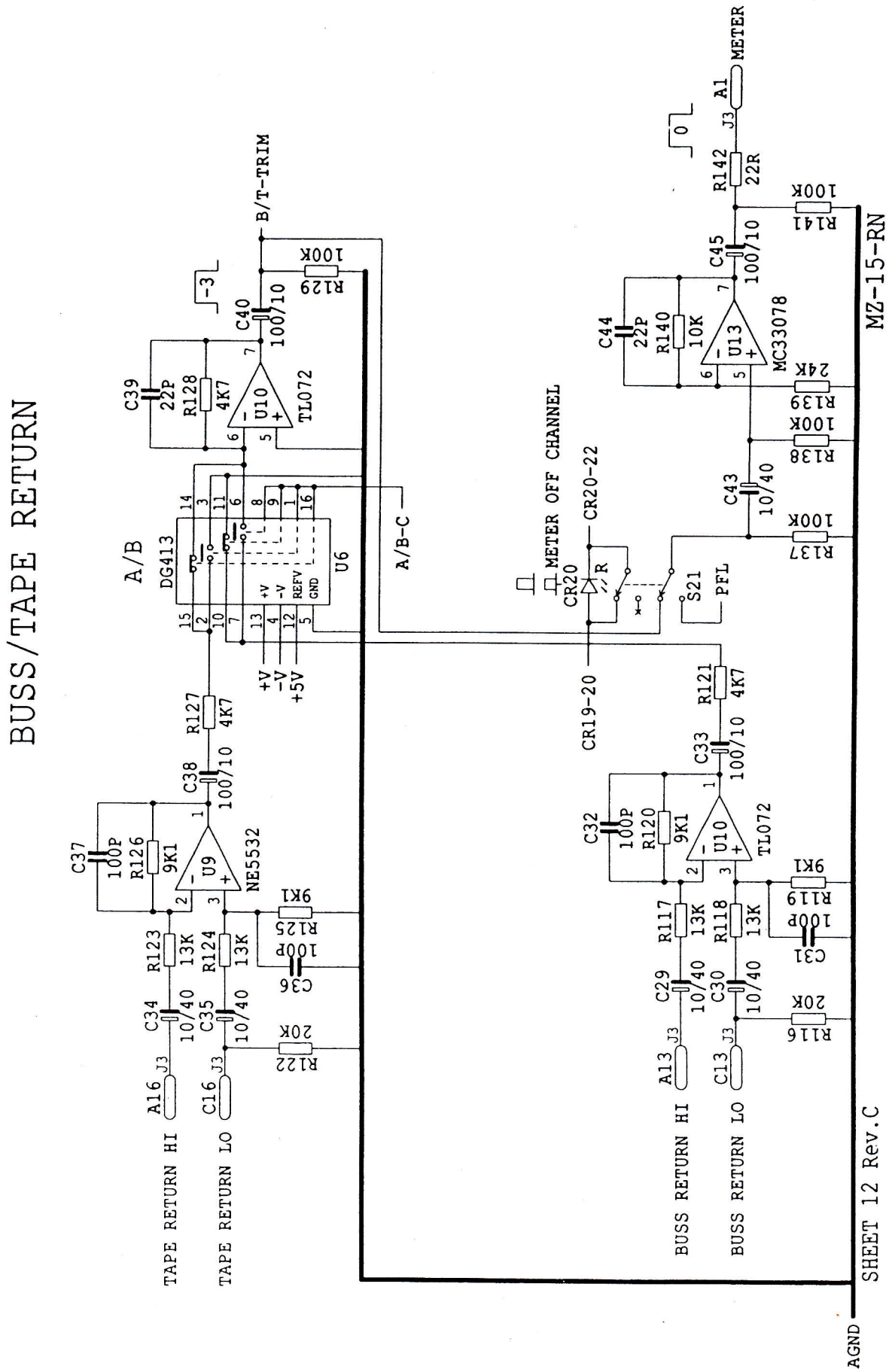

PC712 Buss Return; Tape Return; Meter Feed

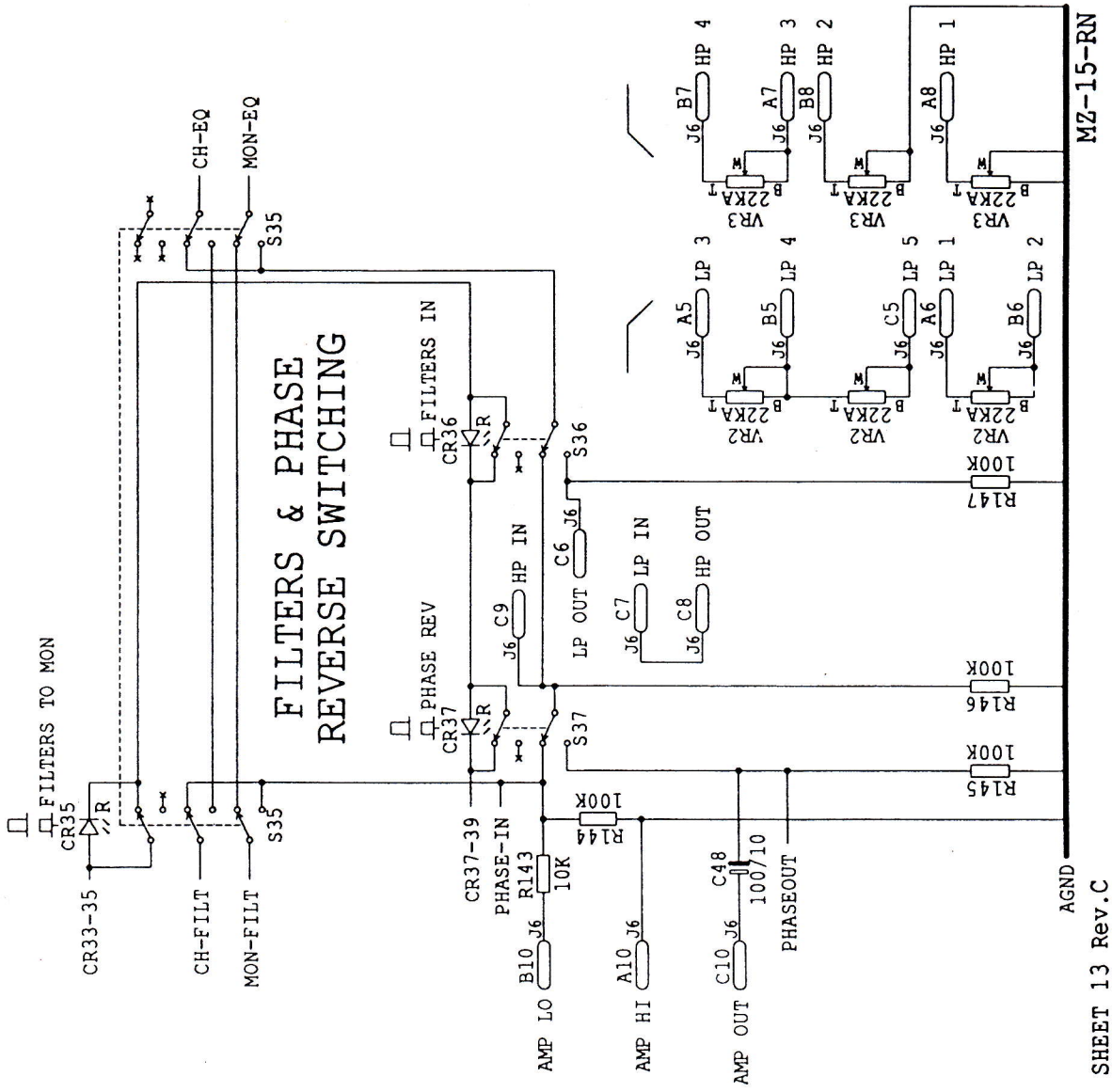

PC712 Filter Switching; Phase Reverse Switching

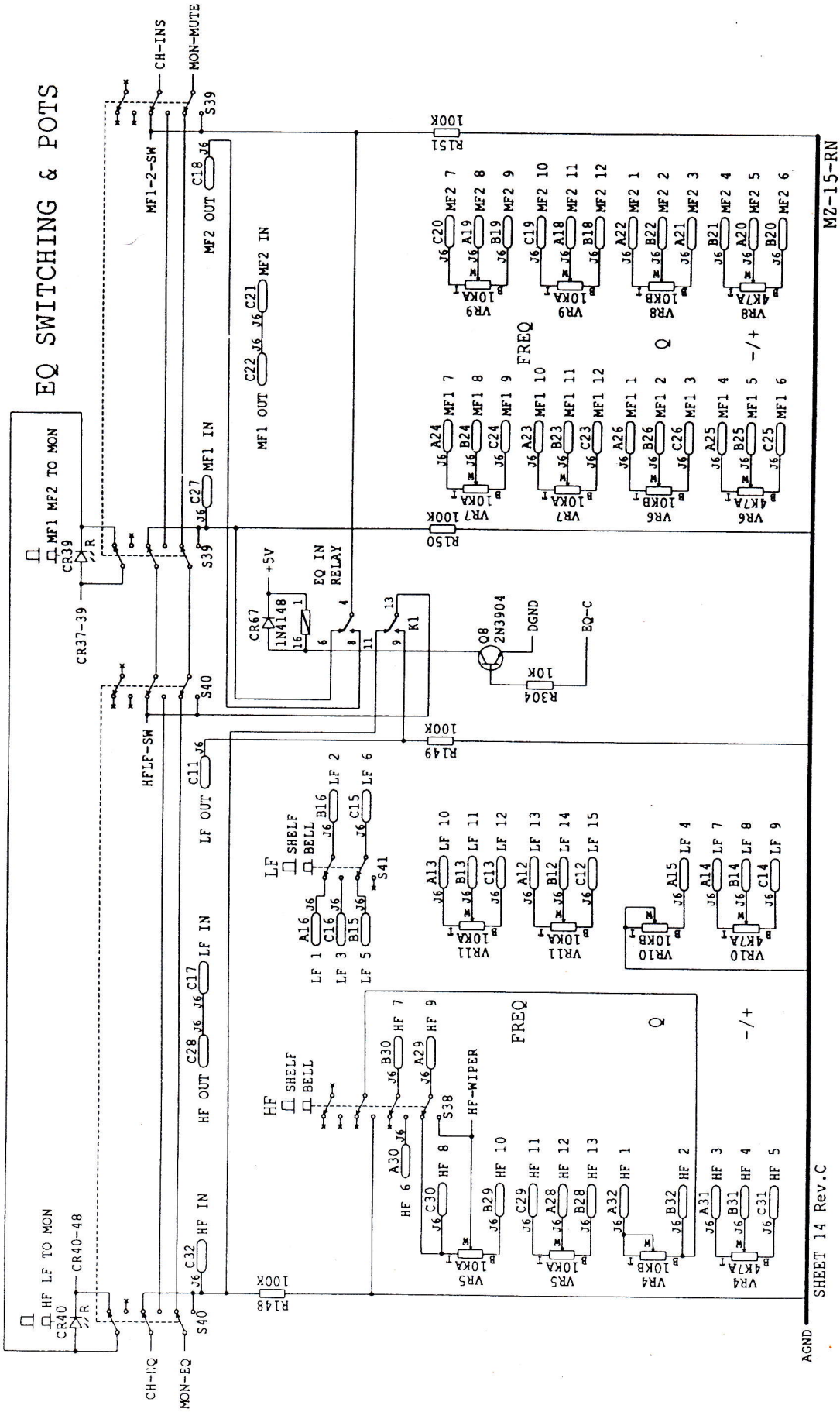

PC712 Equalizer Switching; Equalizer Pots

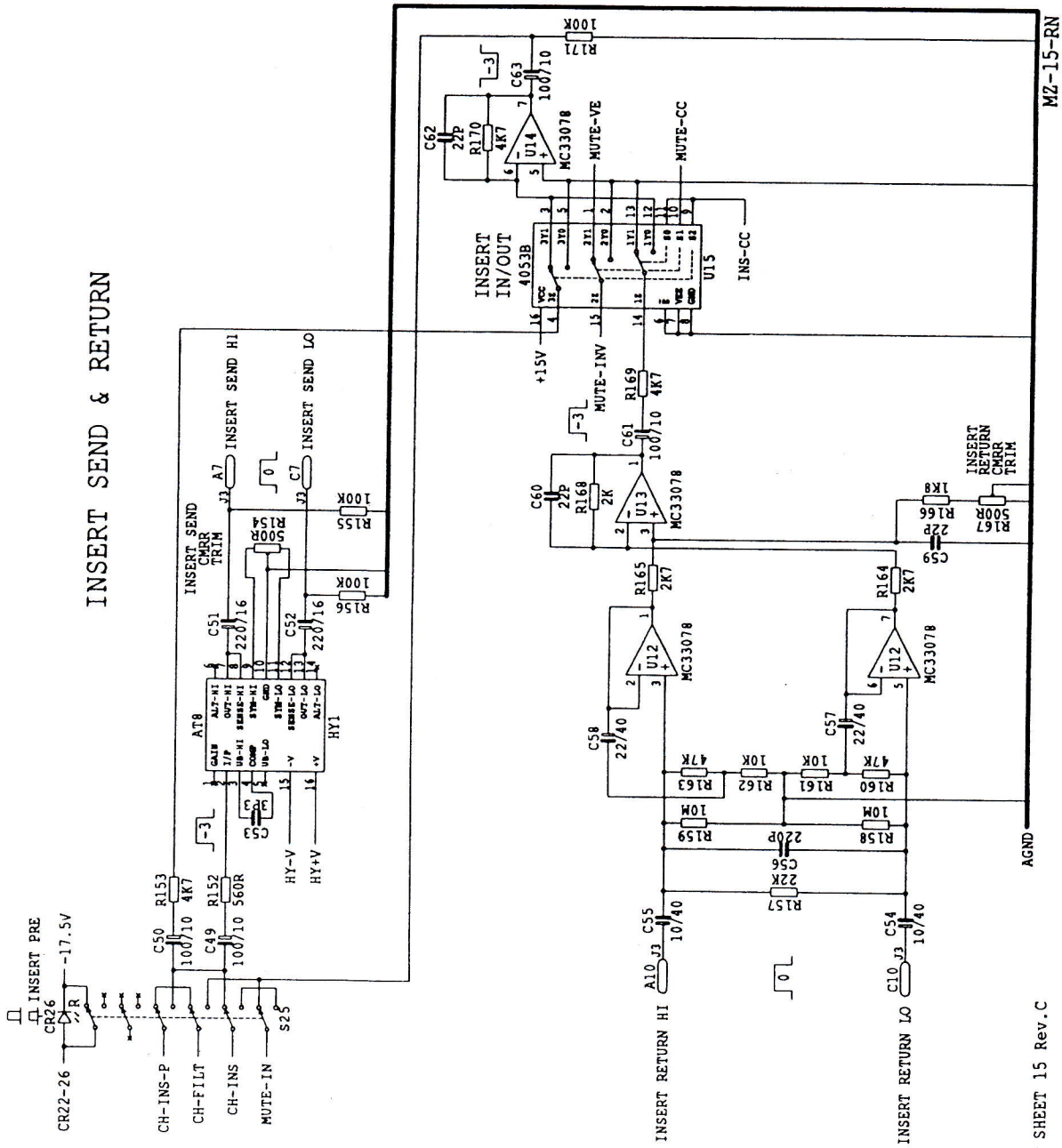

PC712 Insert Send and Return

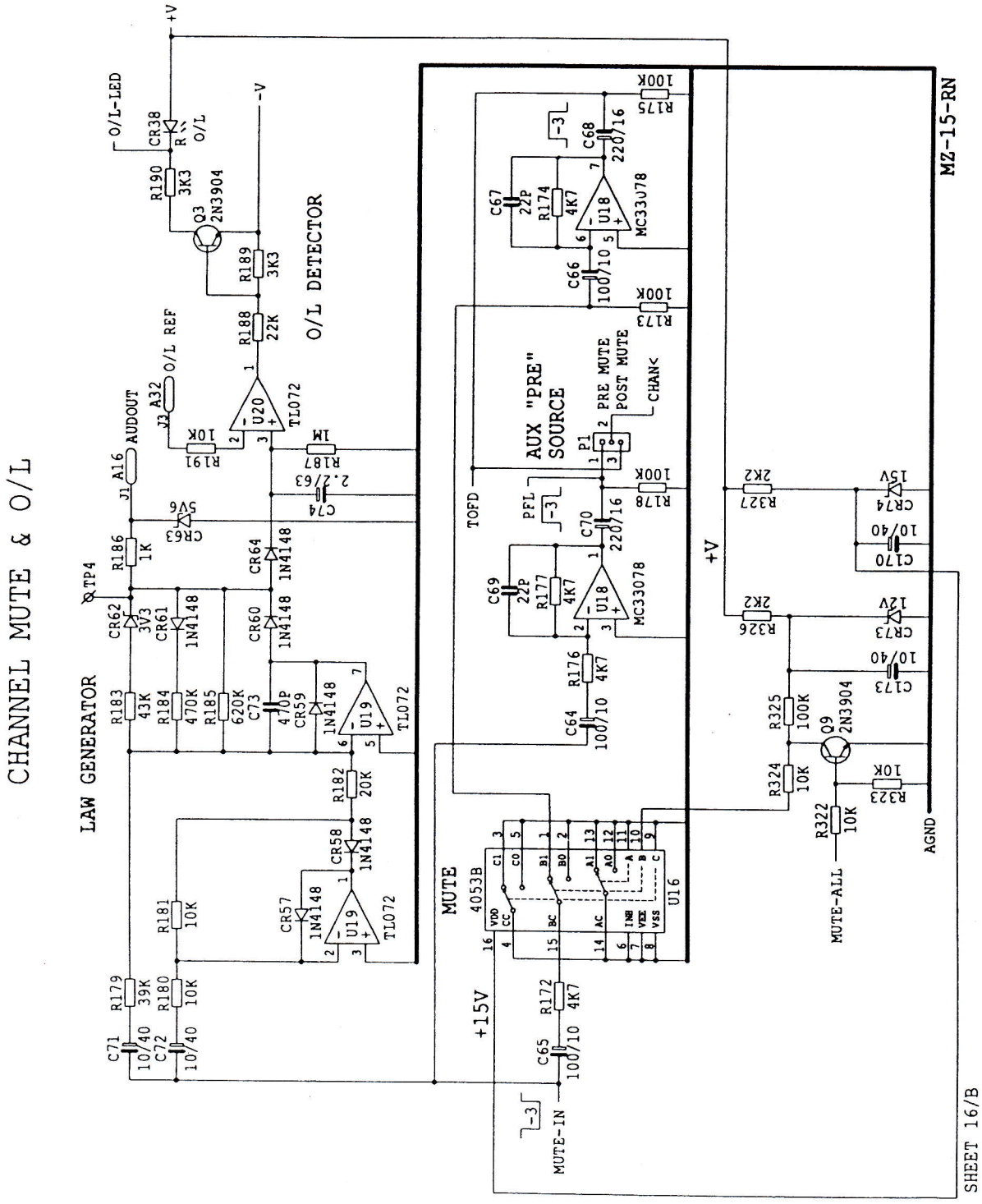

PC712 Channel Mute; Overload Detector; Aux "PRE" Source

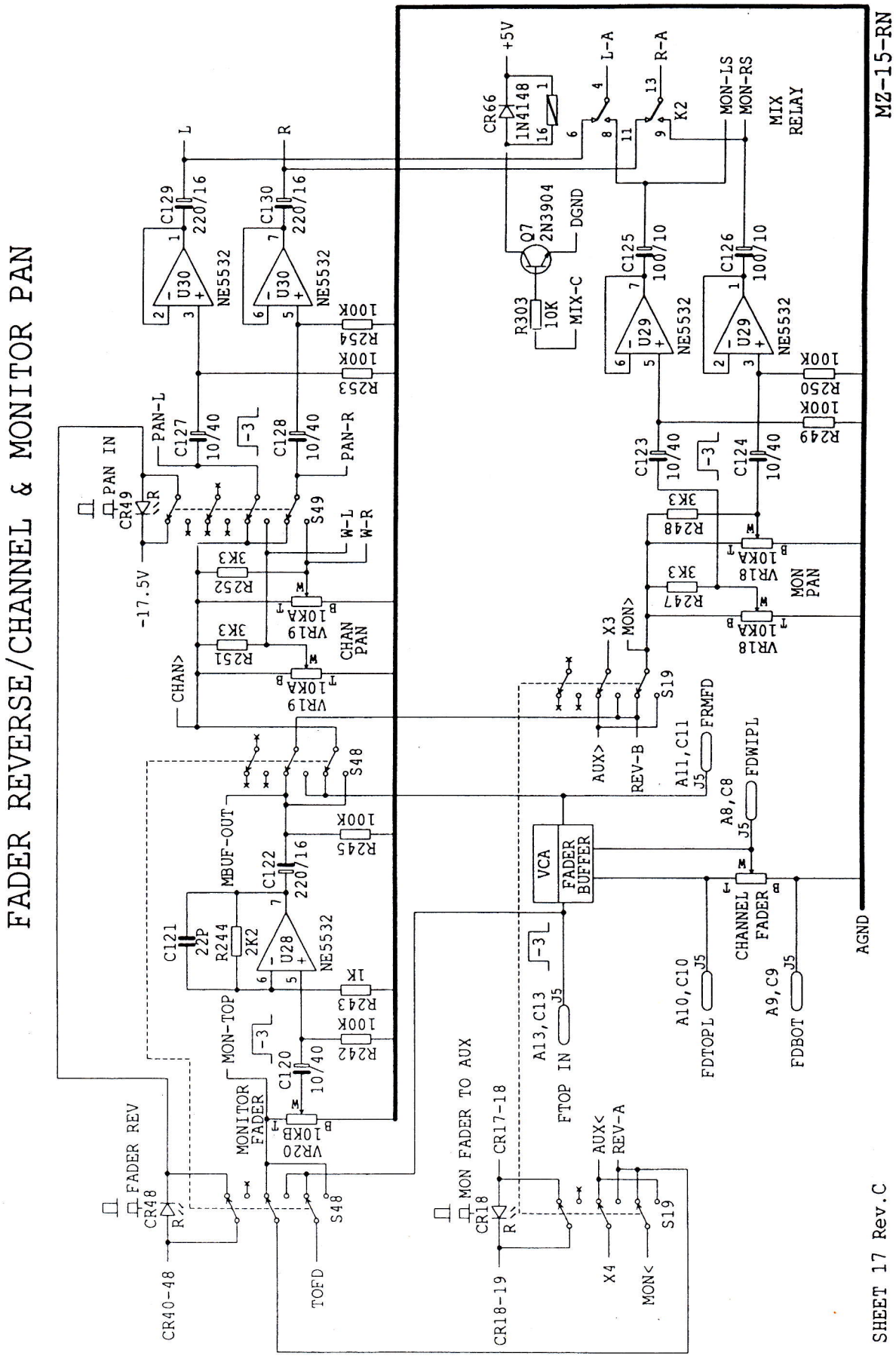

PC712 Fader Reverse; Channel and Monitor Panpot

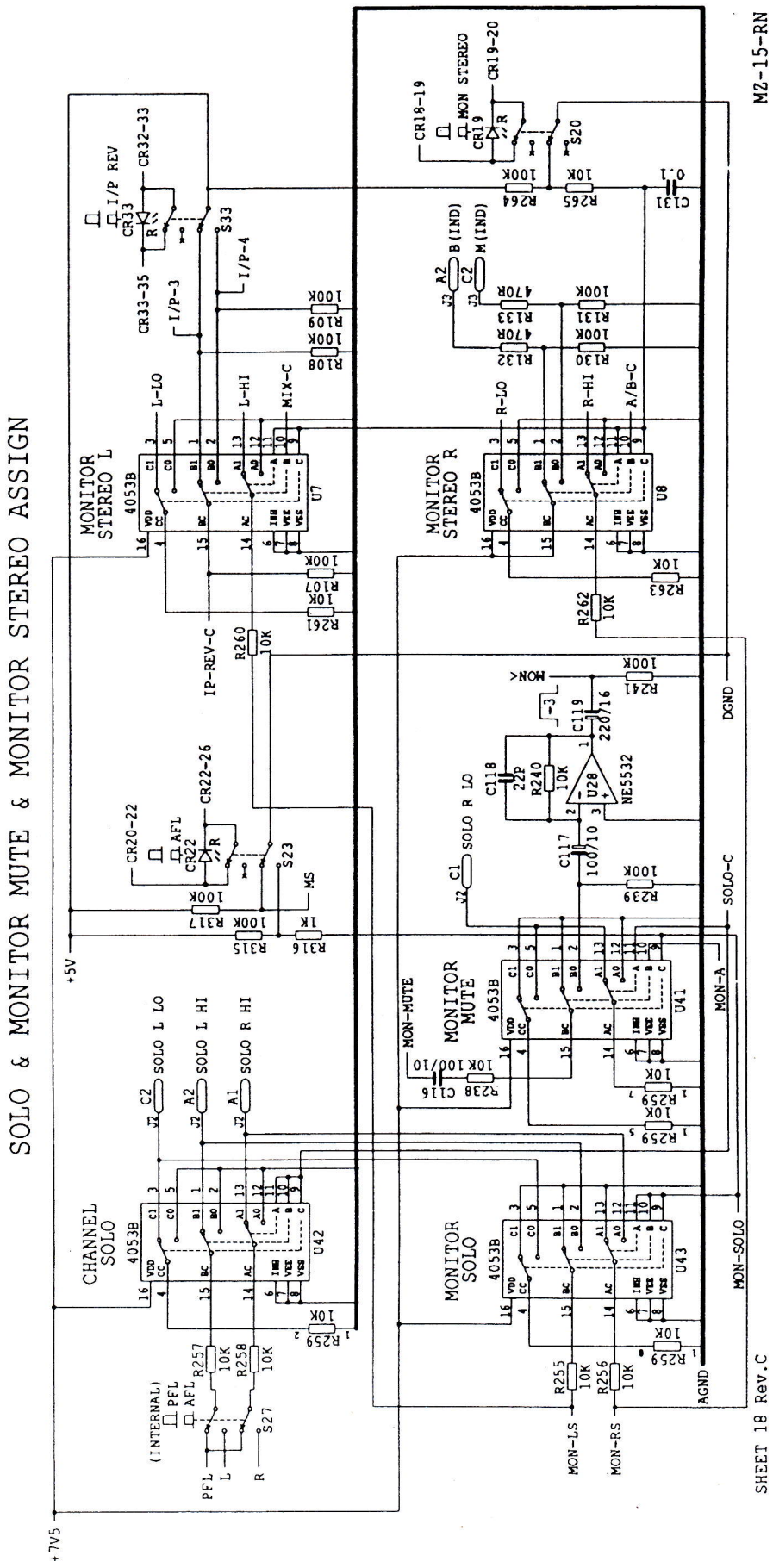

PC712 SOLO; Monitor Mute; Monitor Stereo Assign

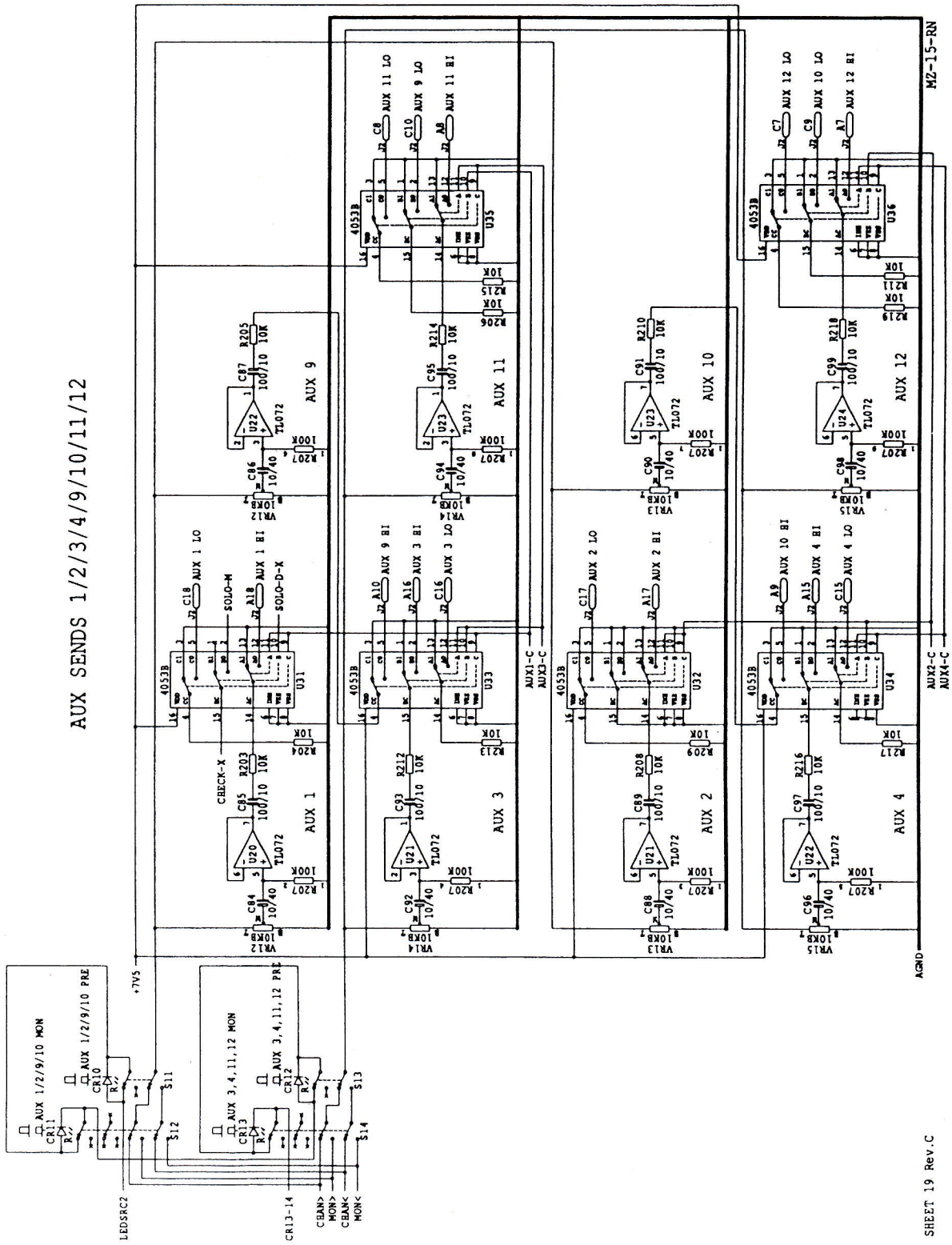

PC712 Auxiliary Sends 1-4; 9-12

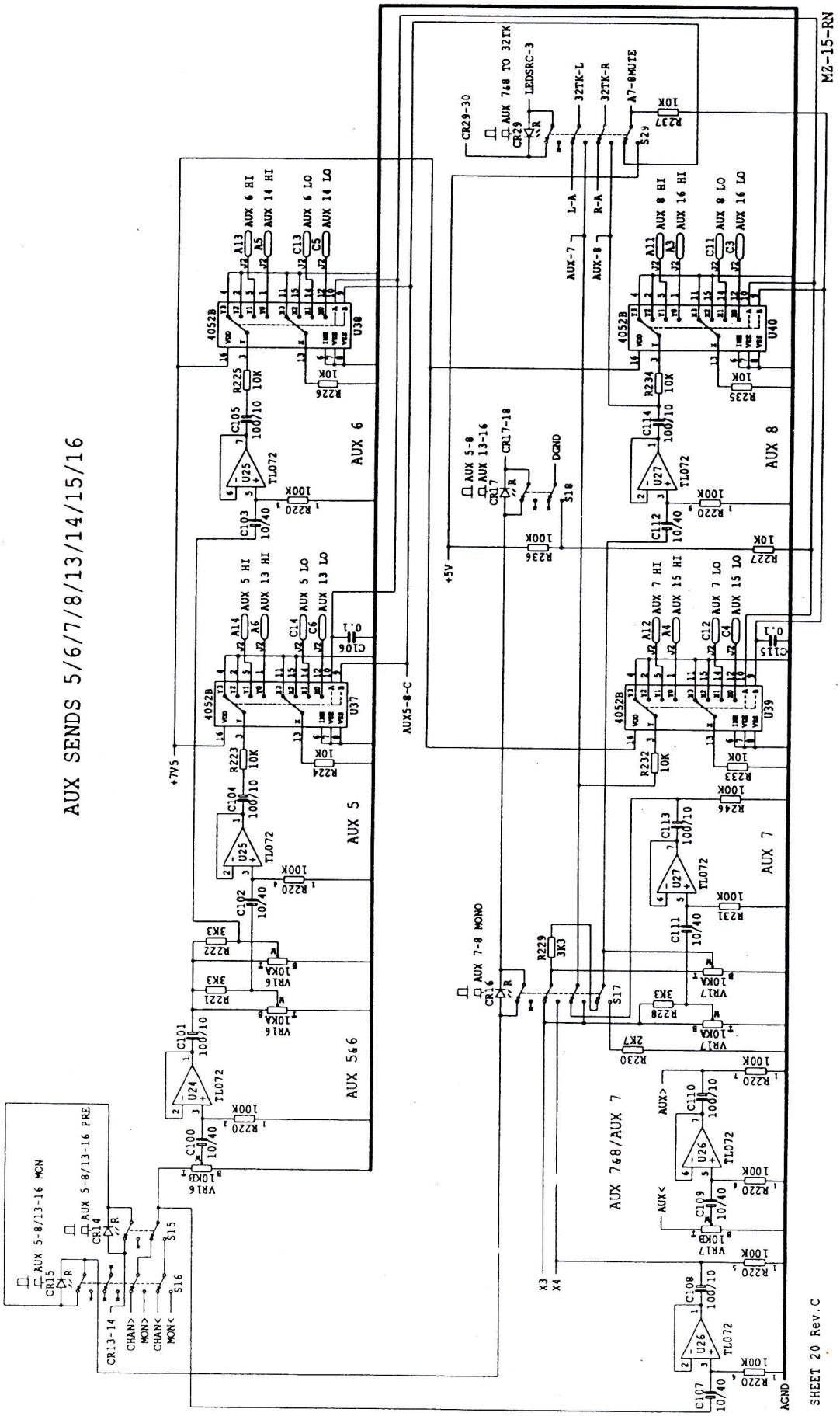

PC712 Auxiliary Sends 5-8; 13-16

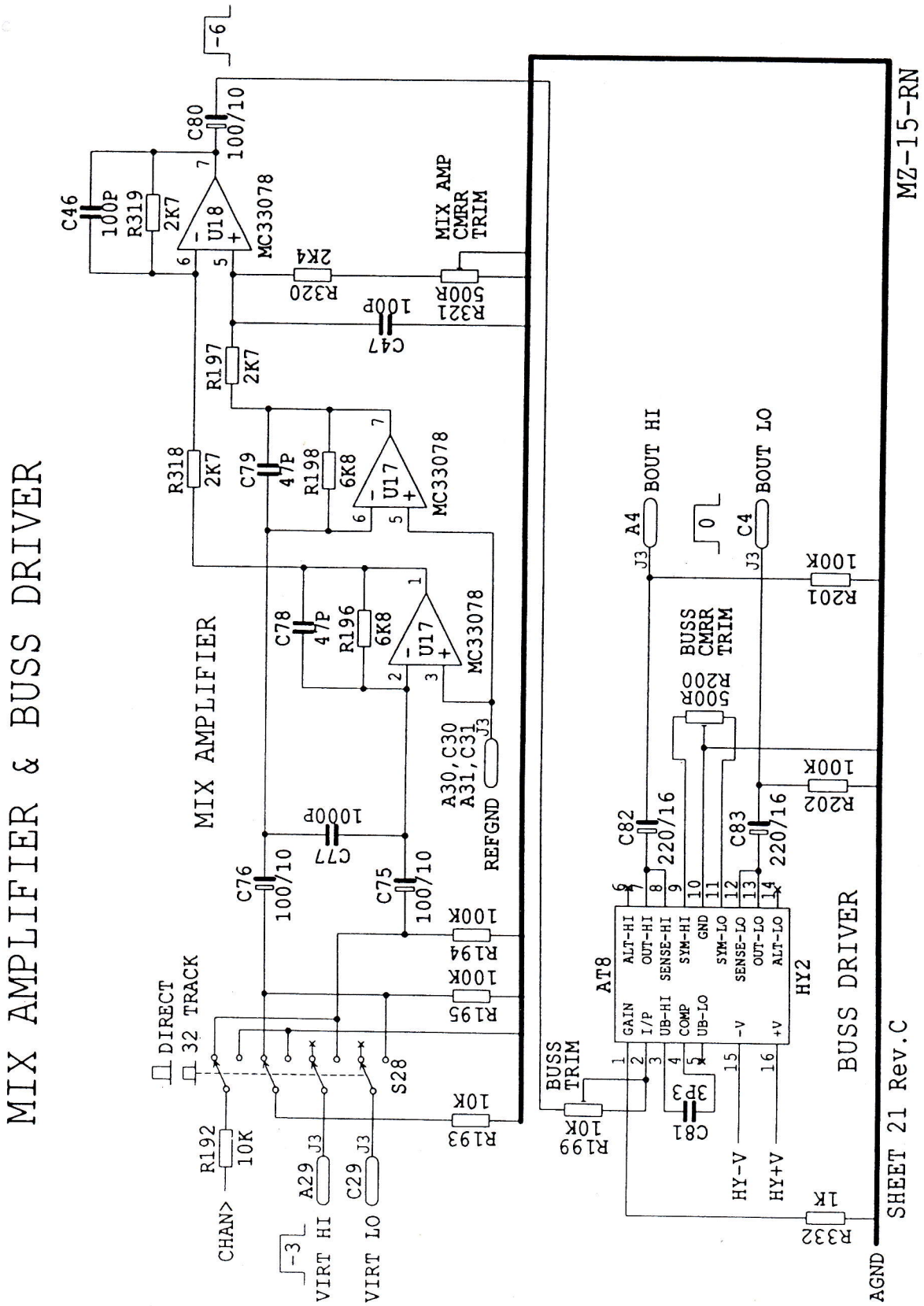

PC712 Mix Amplifier; Buss Driver

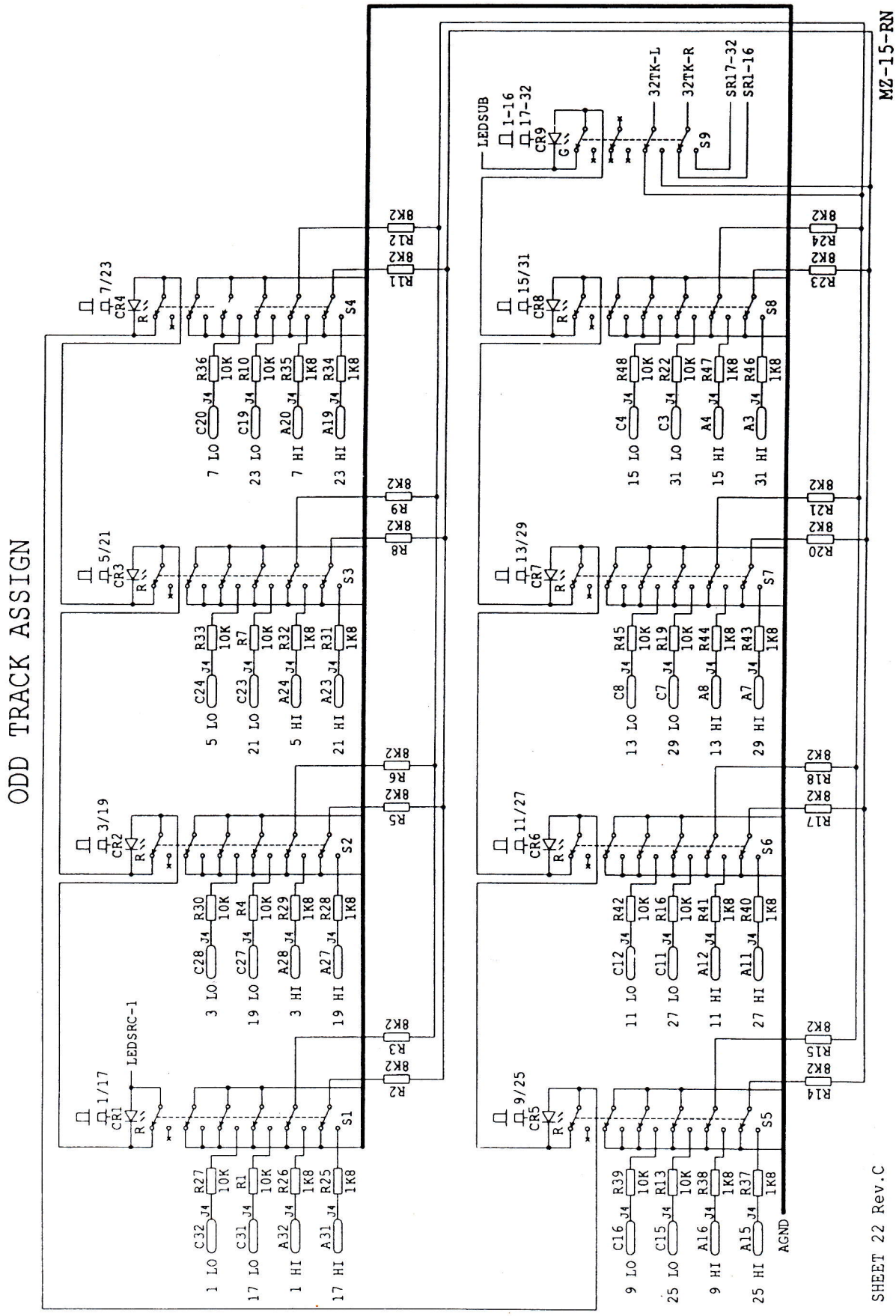

PC712 Odd Track Assigns

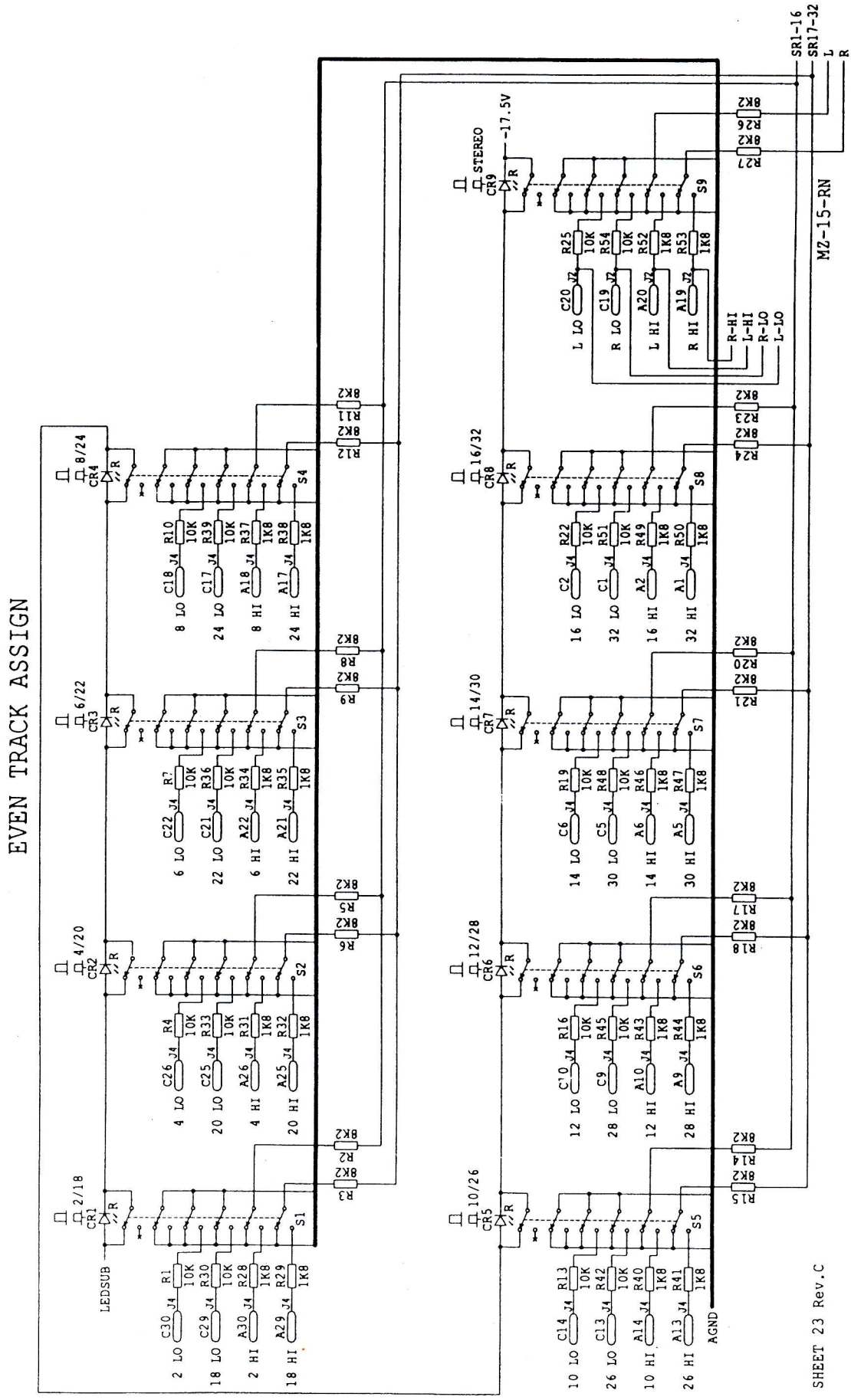

PC712 Even Track Assigns

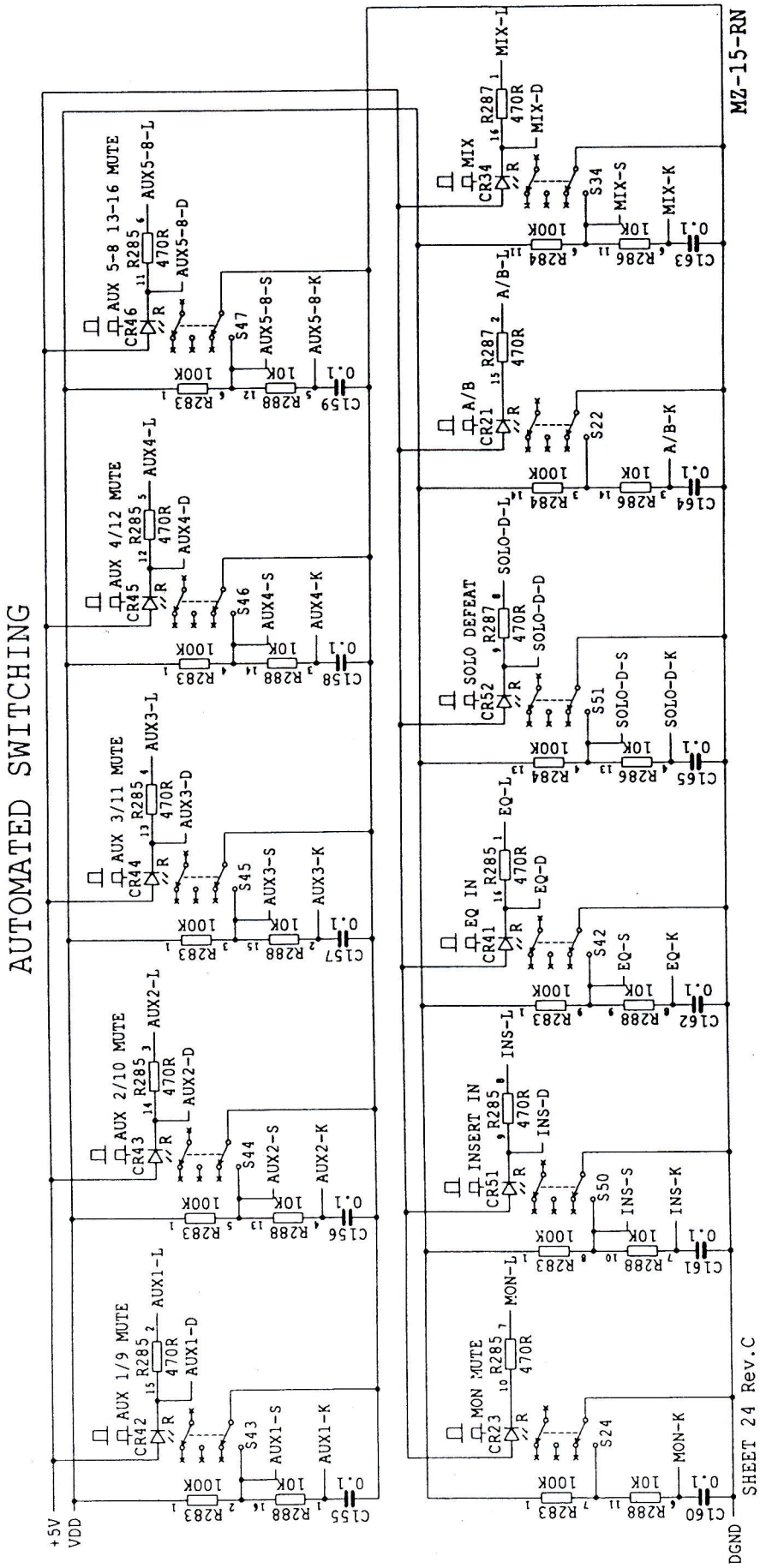

PC712 Automated Switches

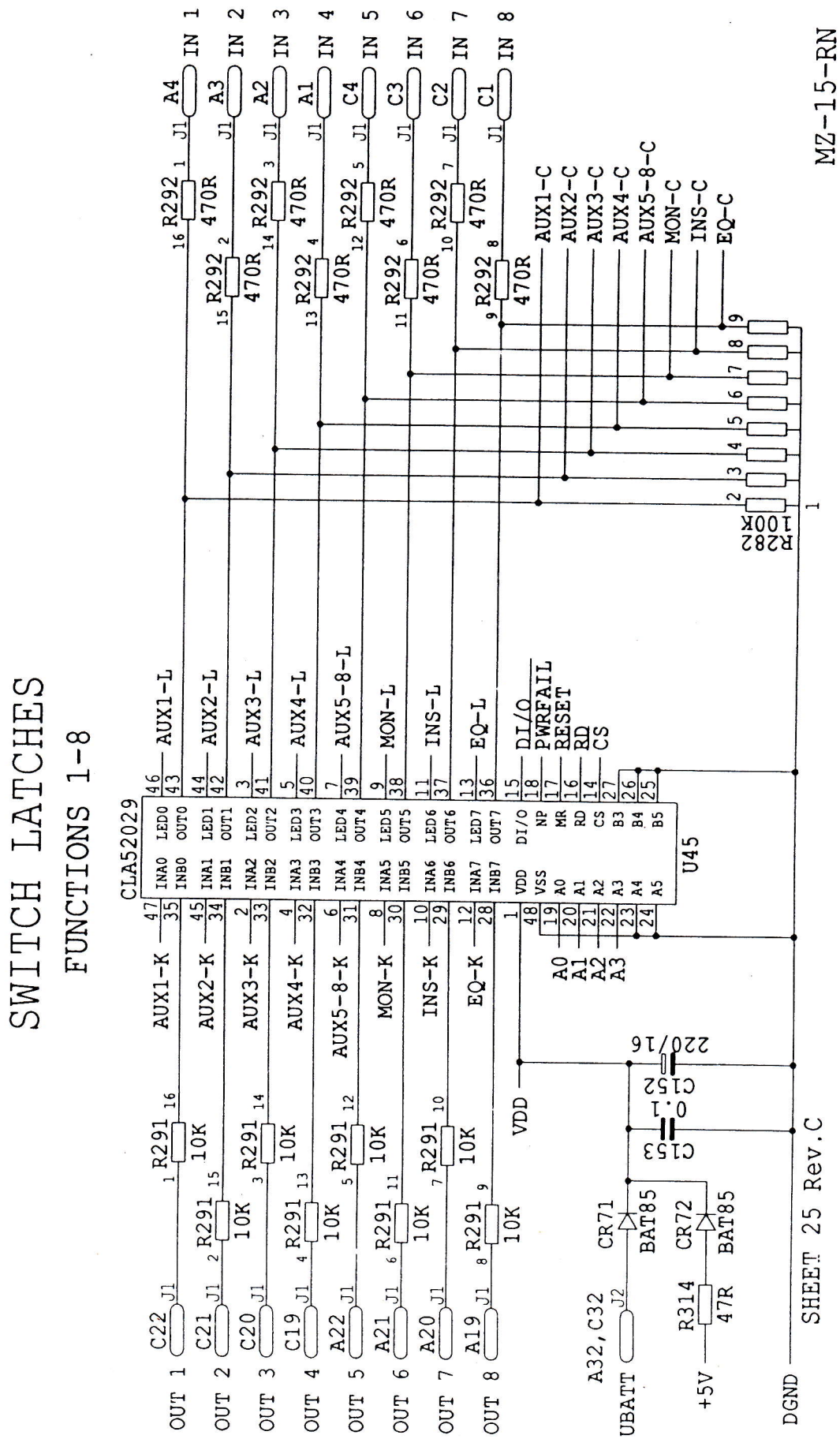

PC712 ASIC Switch Latches 1-8

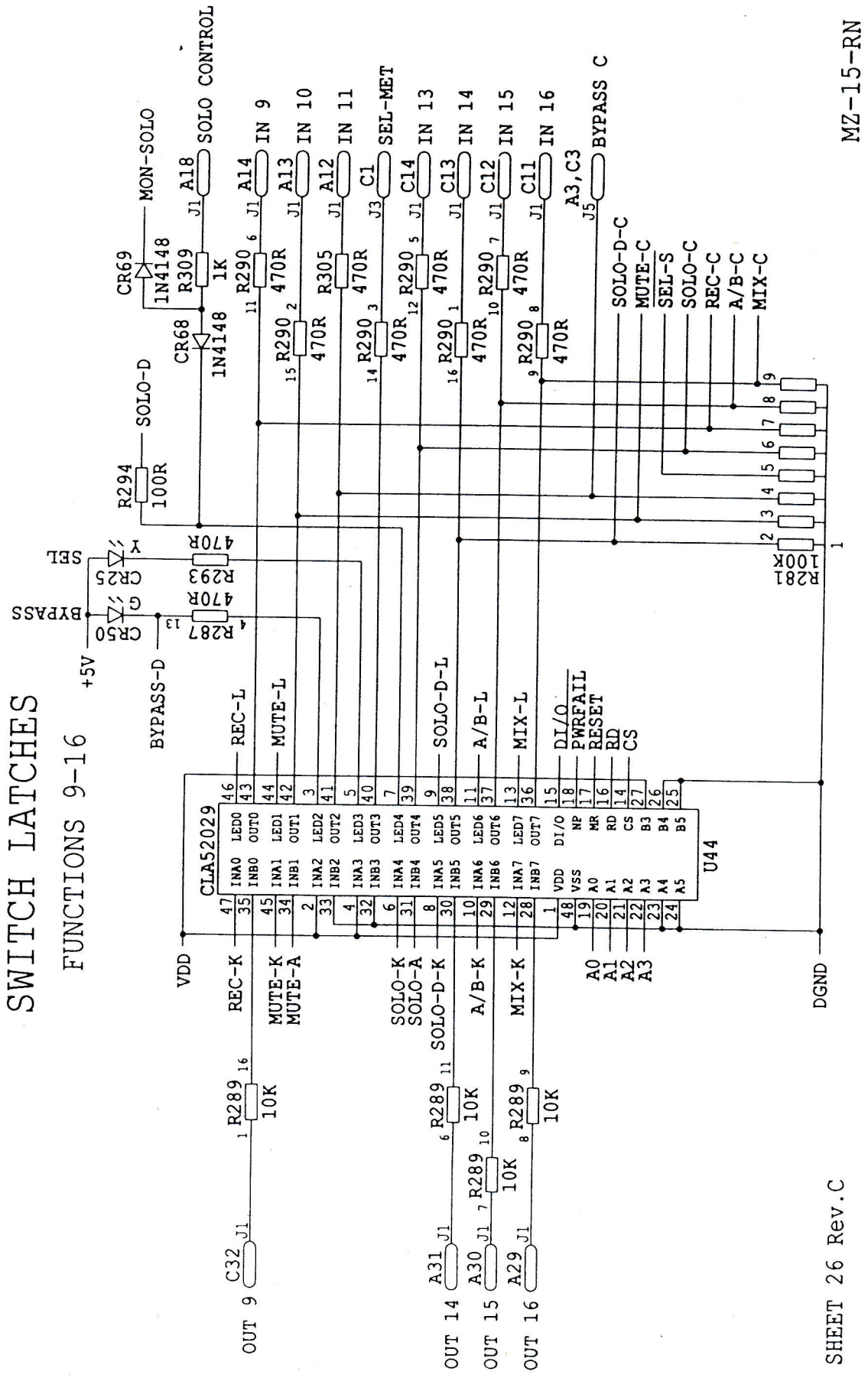

PC712 ASIC Switch Latches 9-16

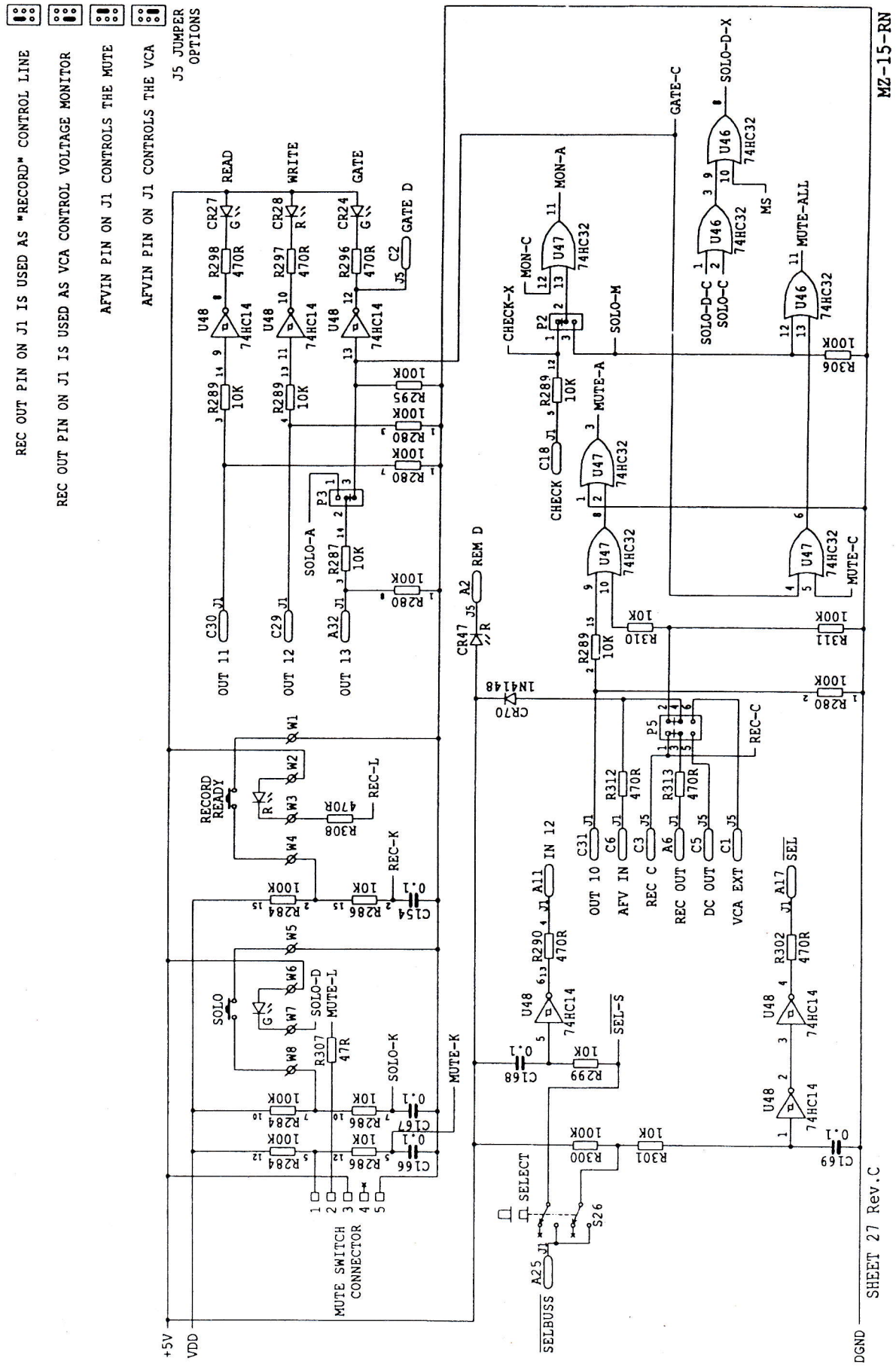

PC712 SEL Switch Logic; CHECK Logic

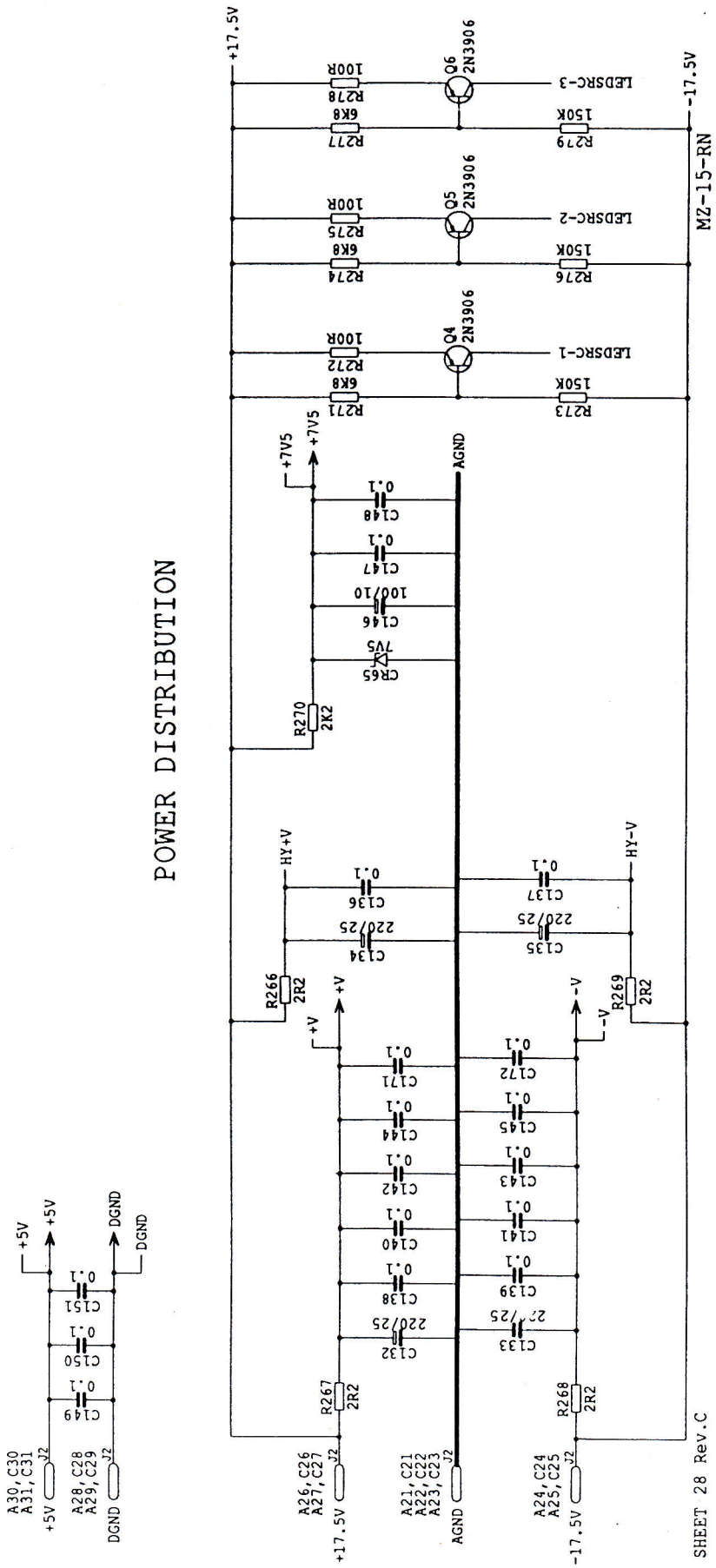

PC712 Power Distribution

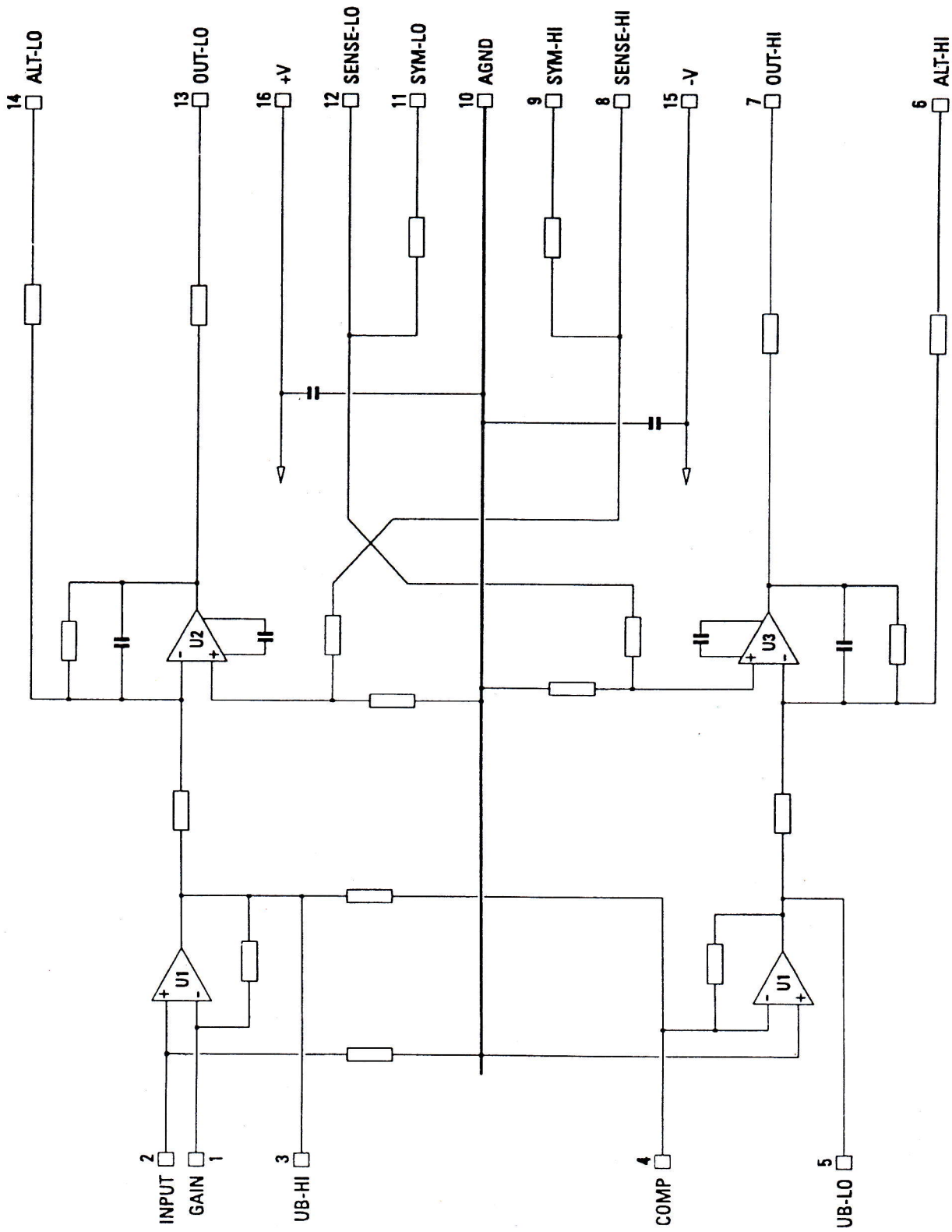

PC712 AT8 Hybrid Line Driver

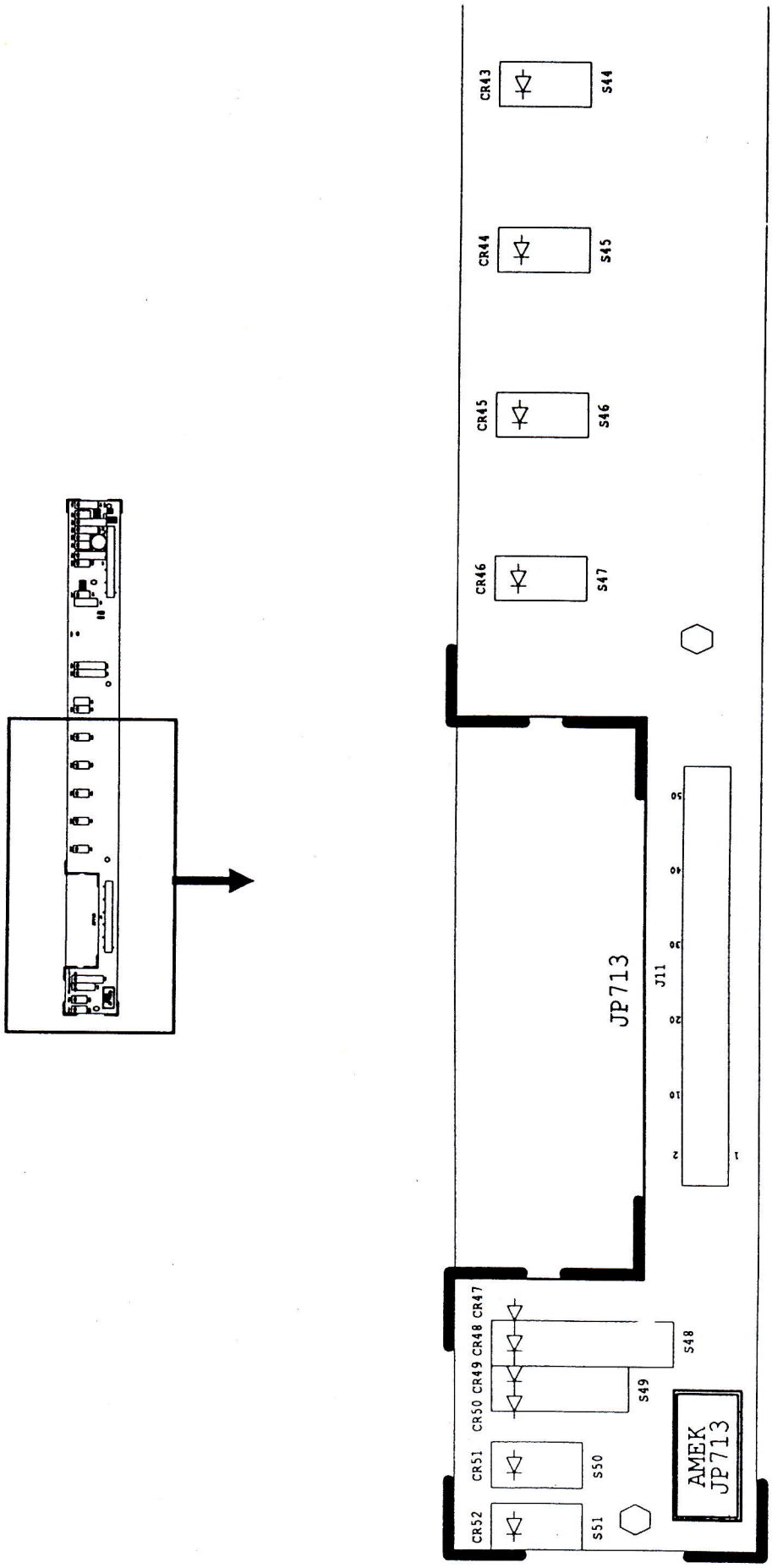

PC713 Component Reference (LH SIDE)

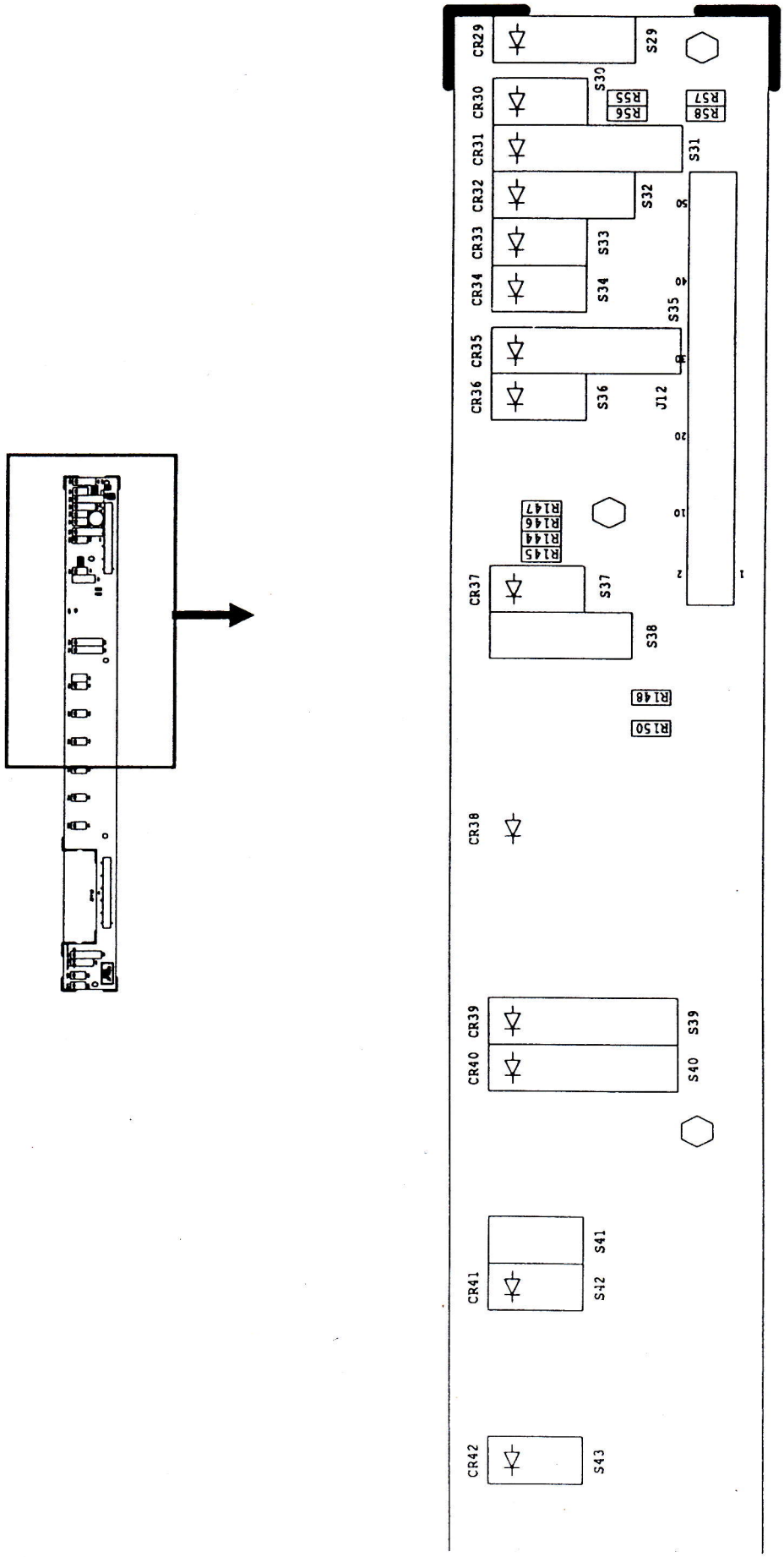

PC713 Component Reference (RH SIDE)

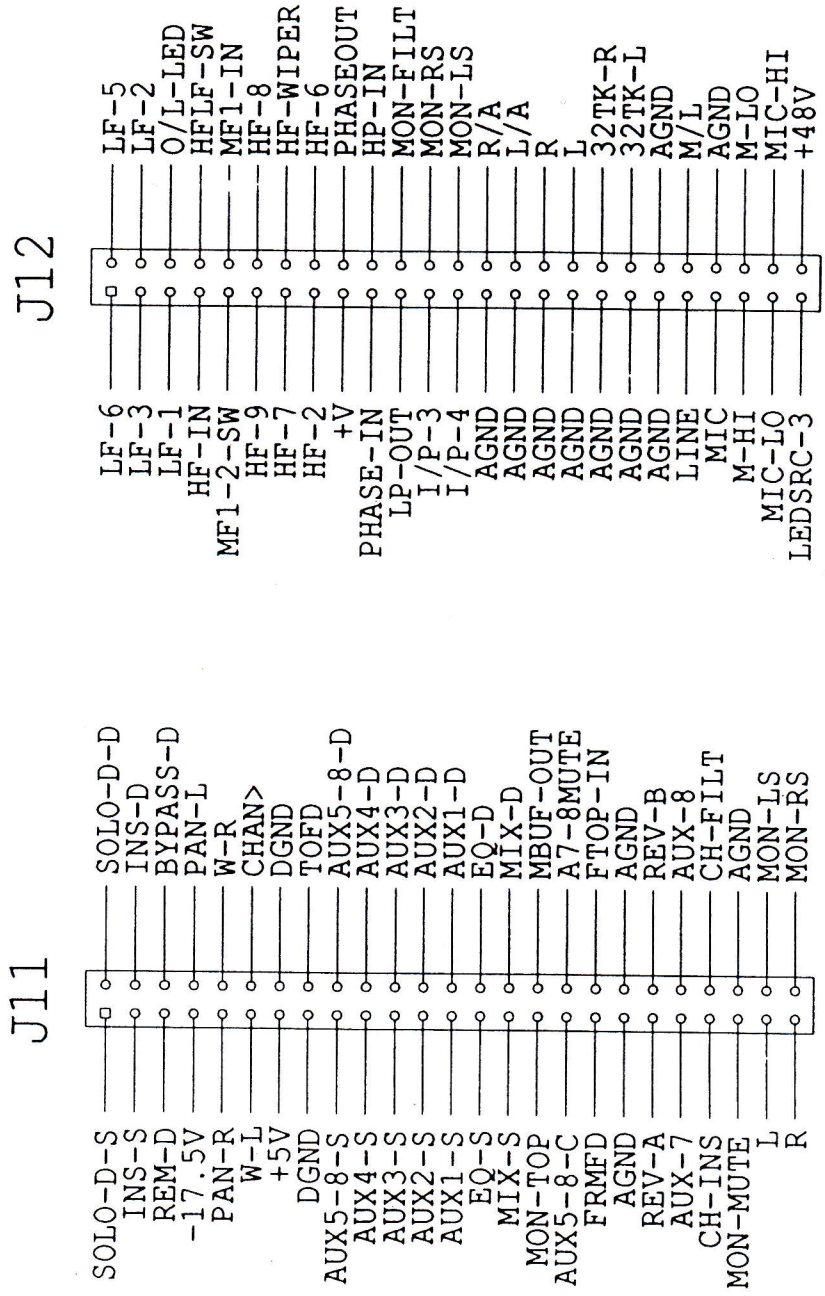

NOTE:
THE CIRCUIT DIAGRAM FOR THIS SUB-ASSEMBLY IS SHOWN AS PART OF THE MAIN CARD PC712

PC713 Connector Pinout Details

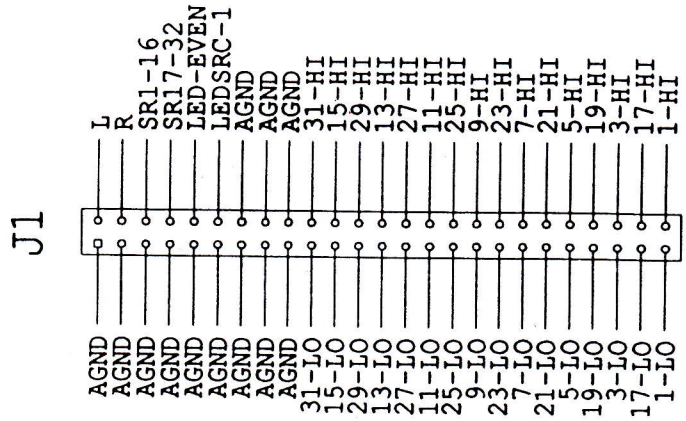

NOTE:
THE CIRCUIT DIAGRAM FOR THIS SUB-ASSEMBLY IS SHOWN AS PART OF THE MAIN CARD PC712

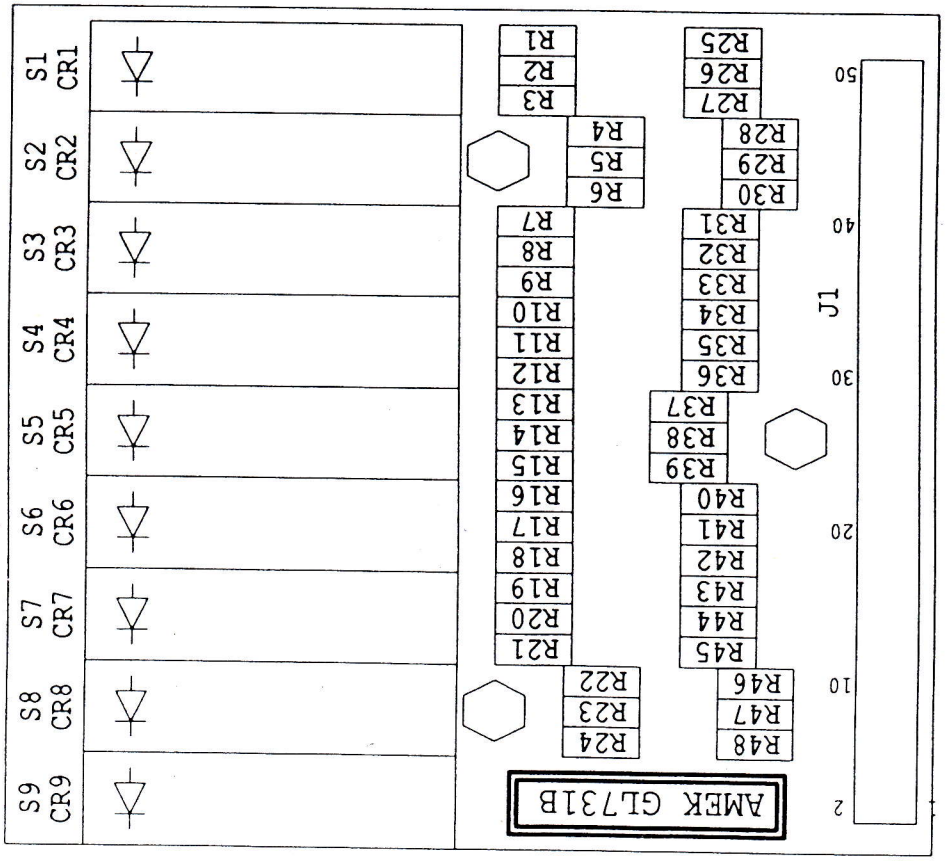

GL731B

PC731 Component Reference and Pinout

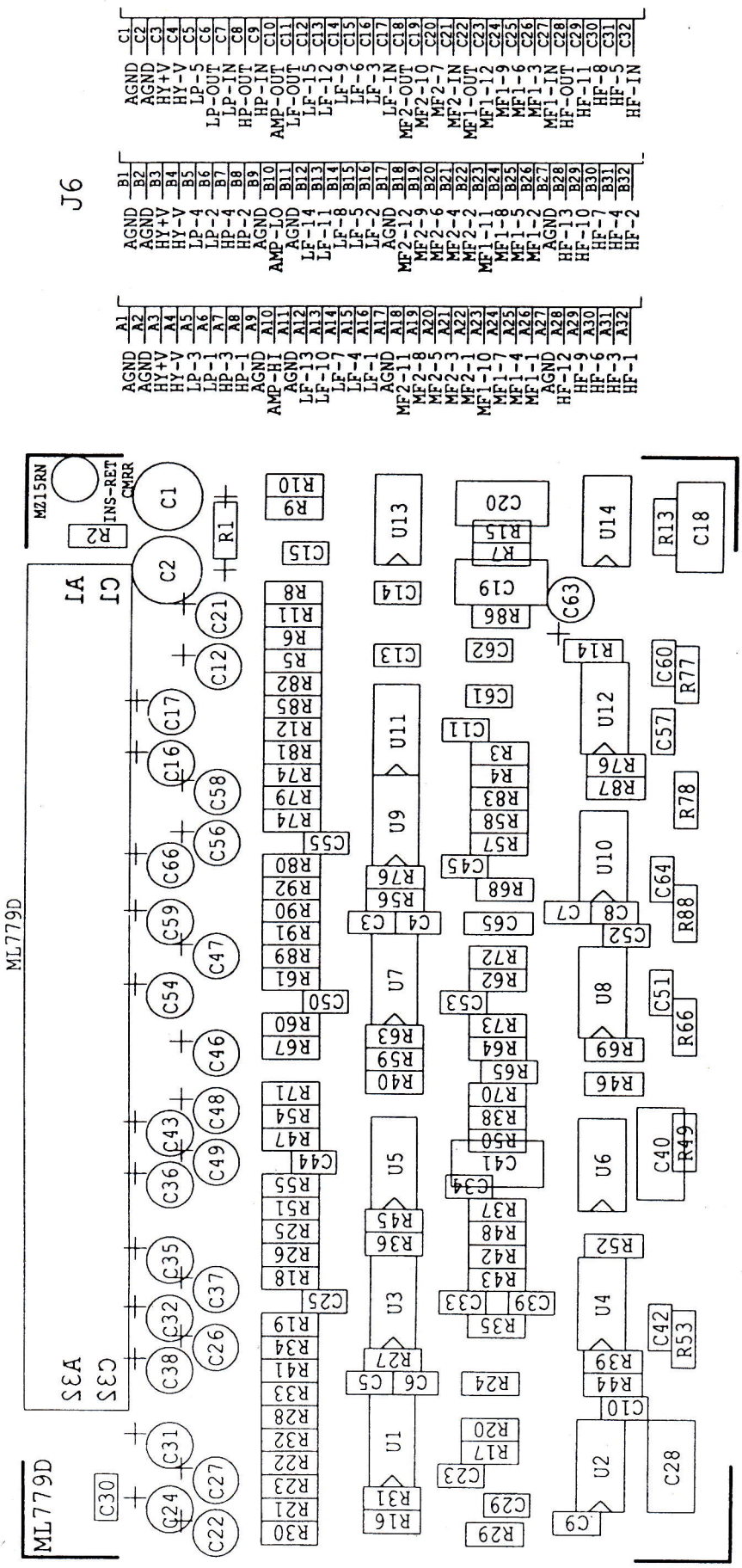

PC779 Component Reference and Pinout

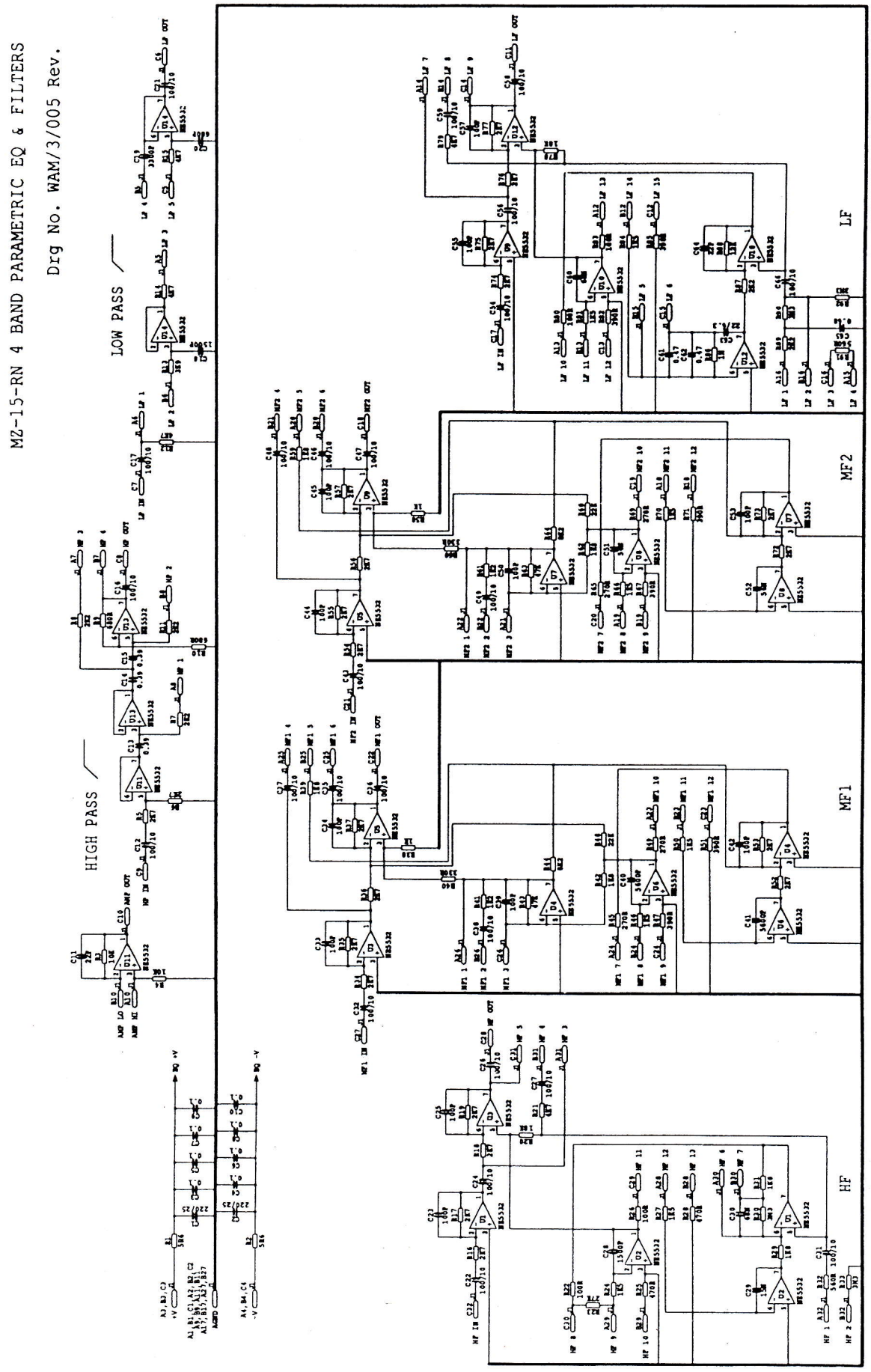

PC779 Equalizer Circuit Diagram

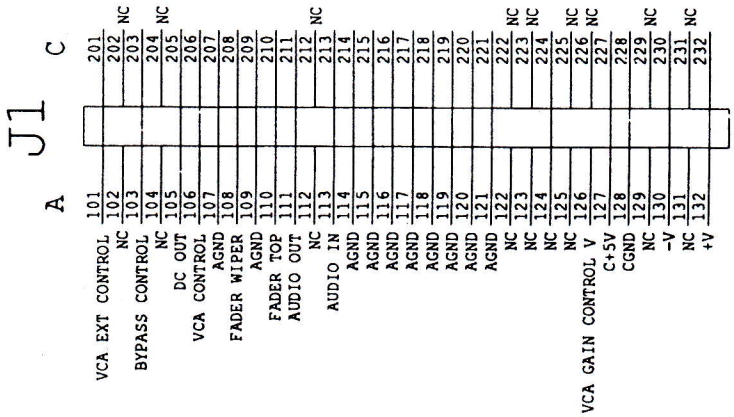

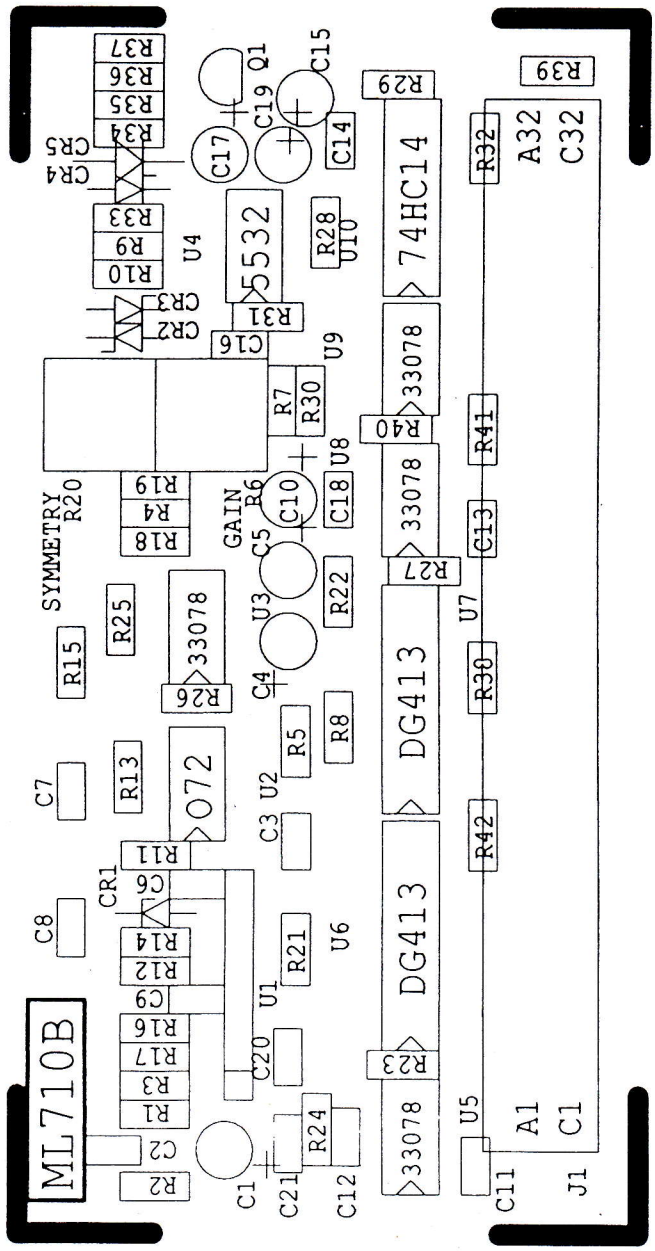

PC710 Component Reference and Pinout

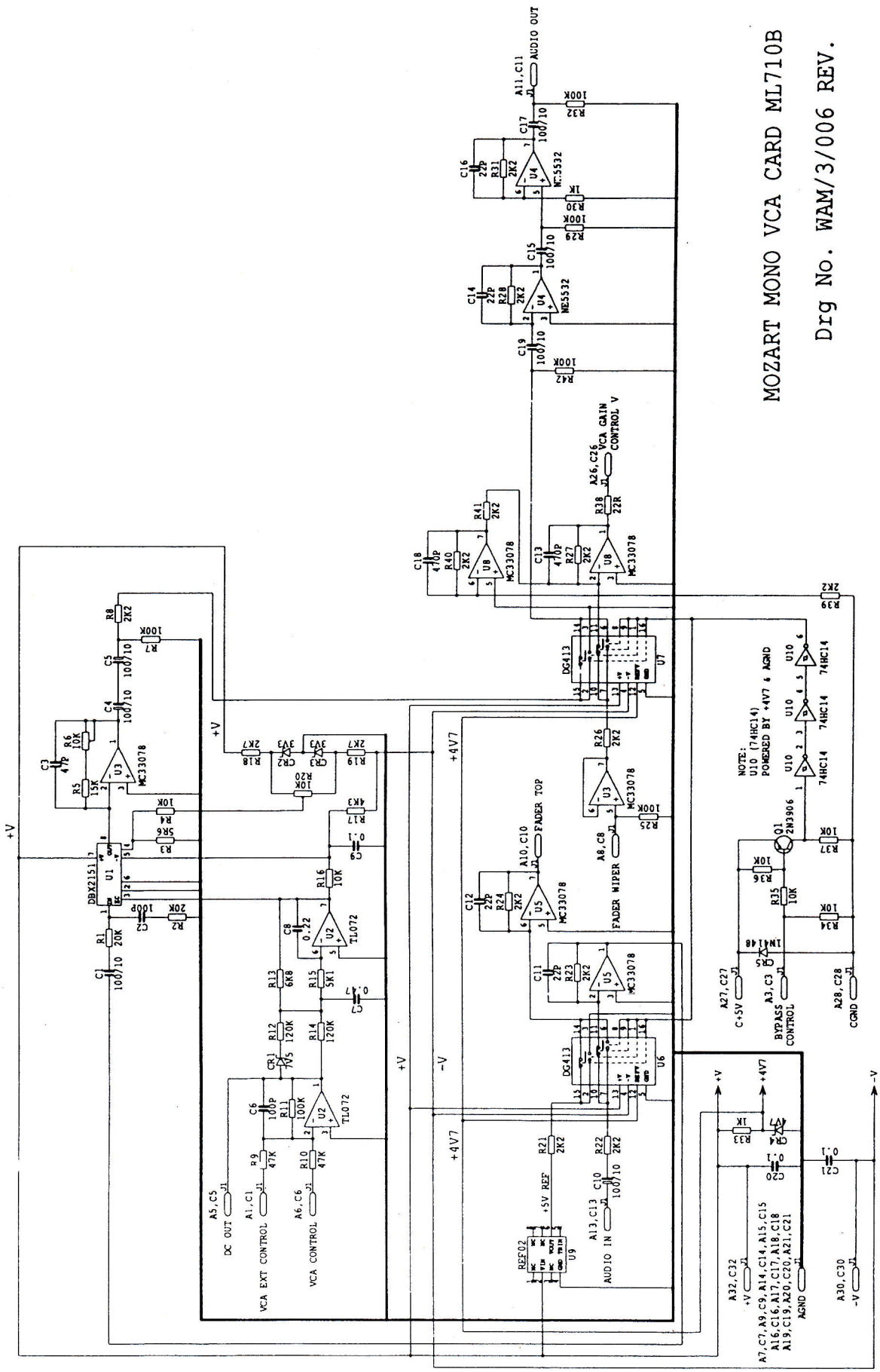

PC710 Mono VCA Circuit Diagram